The Harman Kardon
Model TD4400

Manual 162A

CD TRANSCRIPTION QUALITY CASSETTE DECK

Technical Manual

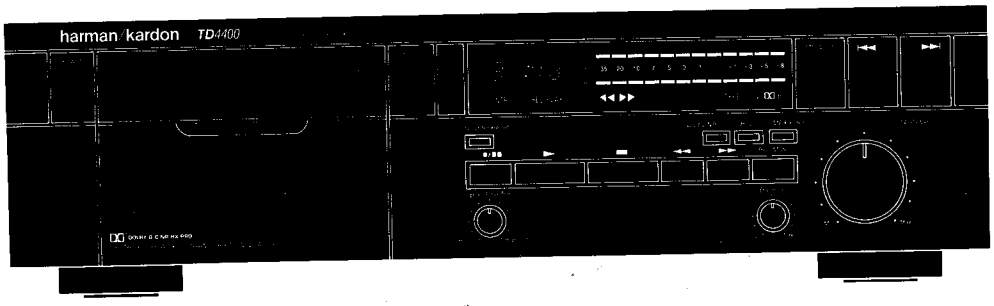

The following marks found in the parts list of this manual identify the models as follows.

- BK : North America area model Black version
- I : International model
- IB : International model Black version
- BB : Australia model Black version

TD4400

harman/kardon

240 Crossways Park West, Woodbury, N. Y. 11797
1112-3152162A5 P-119010 2000 Printed in Japan

SPECIFICATIONS

		Nominal	Limit
Track Configuration		4-track 2 Channel Stereo Cassette Deck	
• MECHANICAL SECTION			
Record/Playback Tape Speed Drift 4.75cm/sec.		0.2% ± 2.0%	
Wow and Flutter		0.045% (NAB) ≤ 0.1% 0.07% (CCIR)	
Take Up Torque		50gr.cm	35 ~ 70gr.cm
Back Tension		4gr.cm	2 ~ 6gr.cm
F.FWD Torque		100gr.cm	70 ~ 150gr.cm
REW Torque		100gr.cm	70 ~ 150gr.cm
F.FWD/REW Time (C-60 Tape)		90sec.	≤ 100sec.
• AMPLIFIER SECTION			
Bias Frequency		105kHz ± 5kHz	
Playback Output		640mV ± 1.5dB	
Signal-to-Noise Ratio at Line Input (Input 1kHz, 100mV) IHF-A WTD at Dolby Level			
Dolby NR off			
	LN	51dB	
	CrO_2	54dB	
	Metal	54dB	
Dolby B NR			
	LN	61dB	
	CrO_2	64dB	≥ 60dB
	Metal	64dB	≥ 60dB
Dolby C NR			
	LN	66dB	
	CrO_2	70dB	≥ 66dB
	Metal	70dB	≥ 66dB

		Nominal	Limit
Channel Separation		45dB	≥ 35dB
Crosstalk		70dB	≥ 60dB
Record/Playback Distortion (Input 1kHz)			
	LN	0.9%	≤ 2.0%
	CrO_2	1.5%	≤ 3.0%
	Metal	1.3%	≤ 2.0%
MPX Filter Attenuation			
at 15kHz		0.3dB	≤ 1dB
at 19kHz		35dB	≥ 30dB
Erase Ratio (Input 80Hz)			
	LN	70dB	≥ 60dB
	Metal	61dB	≥ 56dB
Input Sensitivity (Input 1kHz) at Line Input		45mV 40(min) ~ 100(max) mV	
Input Impedance (Input 1kHz) at Line Input		22kΩ 19(min) ~ 30(max) kΩ	
• DIMENSIONS (W x H x D)		17-3/8" x 5" x 12-5/8" (442 x 126 x 320 mm)	
• WEIGHT		11.9lbs (5.4kg)	
• POWER SUPPLY			
U.S.A. and Canada models		AC120V, 60Hz	
International and Australia models		AC220V/240V,50/60Hz	
• POWER CONSUMPTION			
U.S.A. and Canada models		16W	
International and Australia models		18W	

These specifications are service target specs.
Specifications and components are subject to change without notice.
Overall performance will be maintained or improved.

LEAKAGE TEST (FOR SERVICE ENGINEERS IN THE U.S.A.)

Before returning the unit to the user, perform the following safety checks:

1. Inspect all lead dress to make certain that leads are not pinched or that hardware is not lodged between the chassis and other metal parts in the unit.
2. Replace all protective devices such as nonmetallic control knobs, insulating fishpapers, cabinet backs, or shields, isolation resistor-capacitor networks, mechanical insulators, etc.
3. Be sure that no shock hazard exists; check for leakage current using Simpson Model 229 Leakage Tester, standard equipment item No.21641, RCA Model WT540A or use alternate method as follows:

Plug the AC line cord directly into a 120-volt AC receptacle (do not use an Isolation Transformer for this test). Using two clip leads, connect a 1500 ohm, 10-watt resistor paralleled by a 0.15μF capacitor, in series with all exposed metal cabinet parts and a known earth ground, such as a water pipe or conduit. Use a VTVM or VOM with 1000 ohms per volt, or higher sensitivity to measure the AC voltage drop across the resistor. (See Diagram.) Move the resistor connection to each exposed metal part having a return path to the chassis (antenna, metal, cabinet, screw heads, knobs and control shafts, escutcheon, etc.) and measure the AC voltage drop across the resistor. (This test should be performed with the power switch in both the On and Off positions.)

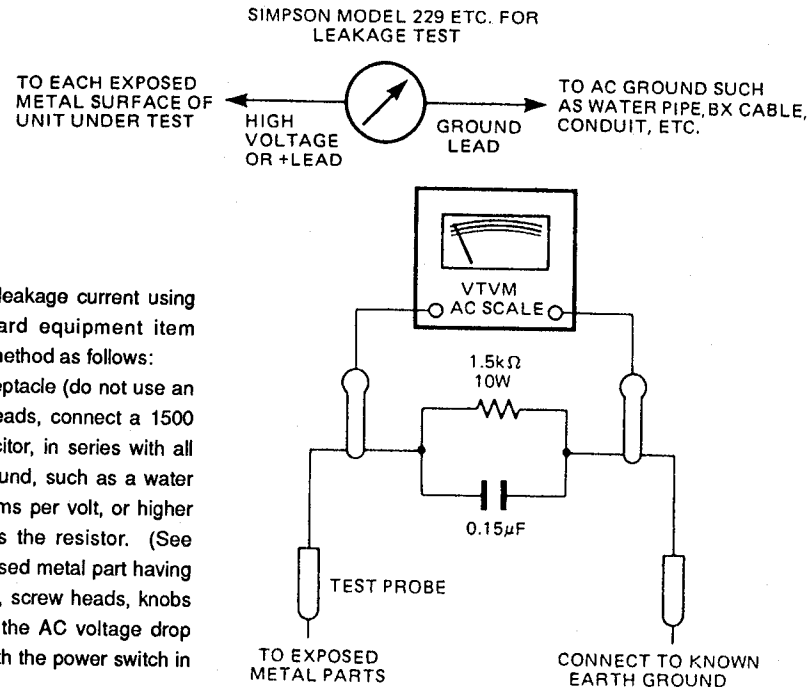

A reading of 0.35 volt RMS or more is excessive and indicates a potential shock hazard which must be corrected before returning the unit to the owner.

CONTROLS AND FUNCTIONS

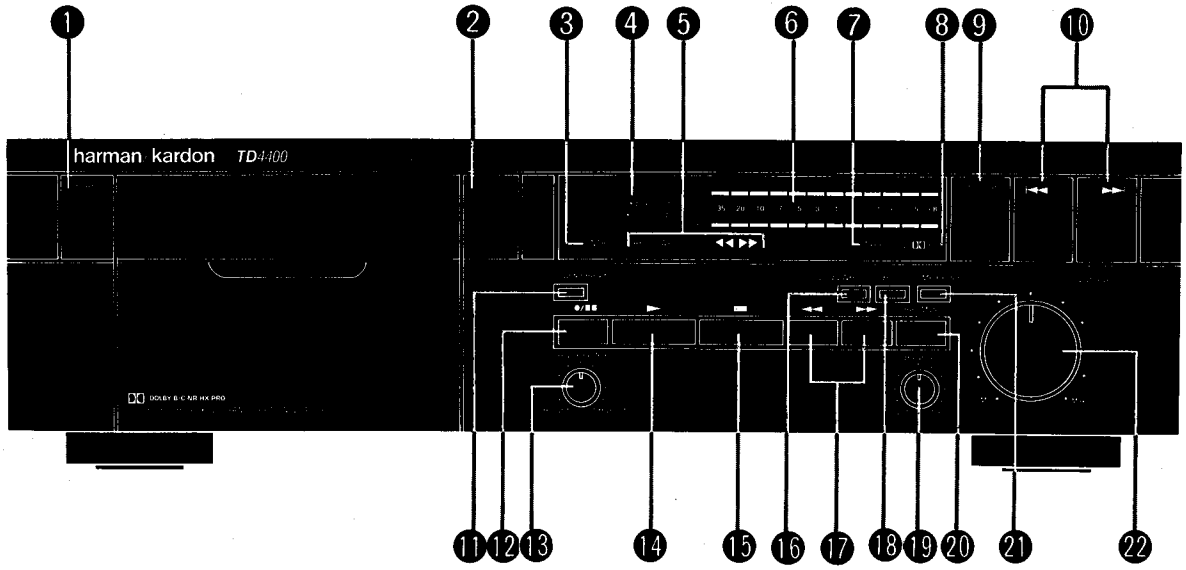

1 POWER SWITCH
Press to turn unit on and off.

2 EJECT
Press to load and remove tape cassette.

3 INTRO
Indicates Intro Scan is engaged.

4 COUNTER
Indicates tape position in minutes and seconds.

5 REC PLAY
Displays operating mode: Record, Play, Rewind or Fast Forward.

6 LEVEL
Shows signal level.

7 TYPE I II IV
Automatically indicates type of tape in use.

8 DOLBY B C
Shows if Dolby B or C circuits are on.

9 INTRO SCAN
Previews each segment on a pre-recorded tape.

10 SKIP REVERSE/SKIP FORWARD
Locates the start of any desired segment on a pre-recorded tape.

11 COUNTER RESET
Resets Tape Counter to 00:00.

12 RECORD/PAUSE
Puts cassette deck in Record ready or pause mode.

13 BIAS FINE TRIM
Adjusts bias when recording.

14 PLAY
Begins playback or recording.

15 STOP
Stops tape transport in any mode.

16 DOLBY* NR
Activates Dolby Noise Reduction circuitry for playing or recording tapes.

17 REWIND/FAST FORWARD
Rapidly rewinds or advances tape.

18 B/C
Selects Dolby B or Dolby C Noise Reduction.

19 BALANCE
Adjusts balance between left and right channels when recording.

20 RECORD MUTE
Inserts blank space when recording.

21 MPX FILTER
Press when recording FM stereo broadcasts using Dolby noise reduction.

22 INPUT LEVEL
Adjusts recording level.

*** NOTE**
Dolby noise reduction manufactured under license from Dolby Laboratories Licensing Corporation.

"Dolby" and the double-D symbol DD are trademarks of Dolby Laboratories Licensing Corporation.

DISASSEMBLY PROCEDURES (REFER TO PAGES 9, 10 AND 11)

[1] CABINET TOP (133) REMOVAL

Remove 4 screws (A) and 2 screws (B), then remove the Cabinet Top (133).

[2] FRONT PANEL ASSEMBLY (AA) REMOVAL

1. Remove the Cabinet Top (133). (Refer to step 1.)
2. Remove the Plate with window (140 and 143).
3. Disconnect CN801, CN901 and CN902 connected to the Main P. C. Board (PCB-1).
4. Remove 3 Rotary Knobs (147 and 151) and the Nut.
5. Remove 7 screws (C) and then remove the Front Panel Assembly (AA).

[3] CASSETTE TAPE RECORDER MECHANISM ASSEMBLY REMOVAL

1. Remove the Front Panel Assembly (AA). (Refer to step 2.)
2. Disconnect LCN801, LCN802 and LCN803 connected to the Cassette Tape Recorder Mechanism Assembly.
3. Disconnect CN101 and CN301 connected to the Main P. C. Board (PCB-1).
4. Remove the spring (179).
5. Remove 6 screws (D) and then remove the Cassette Tape Recorder Mechanism Assembly.

[4] MAIN P. C. BOARD (PCB-1) REMOVAL

1. Remove the Cabinet Top (133). (Refer to step 1.)
2. Disconnect CN101 and CN301 connected to the Cassette Tape Recorder Mechanism Assembly.
3. Disconnect CN102 and CN103 connected to the Front P. C. Board (PCB-2).
4. Disconnect JL101 connected to the Power P. C. Board (PCB-4).
5. Remove the screw (E) and the metal fitting (164).
6. Disconnect CN501, CN502 and CN503 and then remove the Dolby NR P. C. Board (PCB-3) from the Main P. C. Board (PCB-1).
7. Remove 8 screws (F), then remove the Main P. C. Board (PCB-1).

[5] OTHER P. C. BOARDS REMOVAL

1. Remove the Front Panel Assembly (AA). (Refer to step 2.)
2. Remove 8 screws (G) and 3 screws (H), then remove the Front P. C. Board (PCB-2).
3. Remove 4 screws (I) and then remove the Power P. C. Board (PCB-4). If necessary, disconnect the connector.

POWER CORD REPLACEMENT (FOR SERVICE ENGINEERS OTHER THAN NORTH AMERICA)

In order to prevent fire or shock hazard when replacing the power cord, follow the Procedure below to replace the part with the standard supply parts.

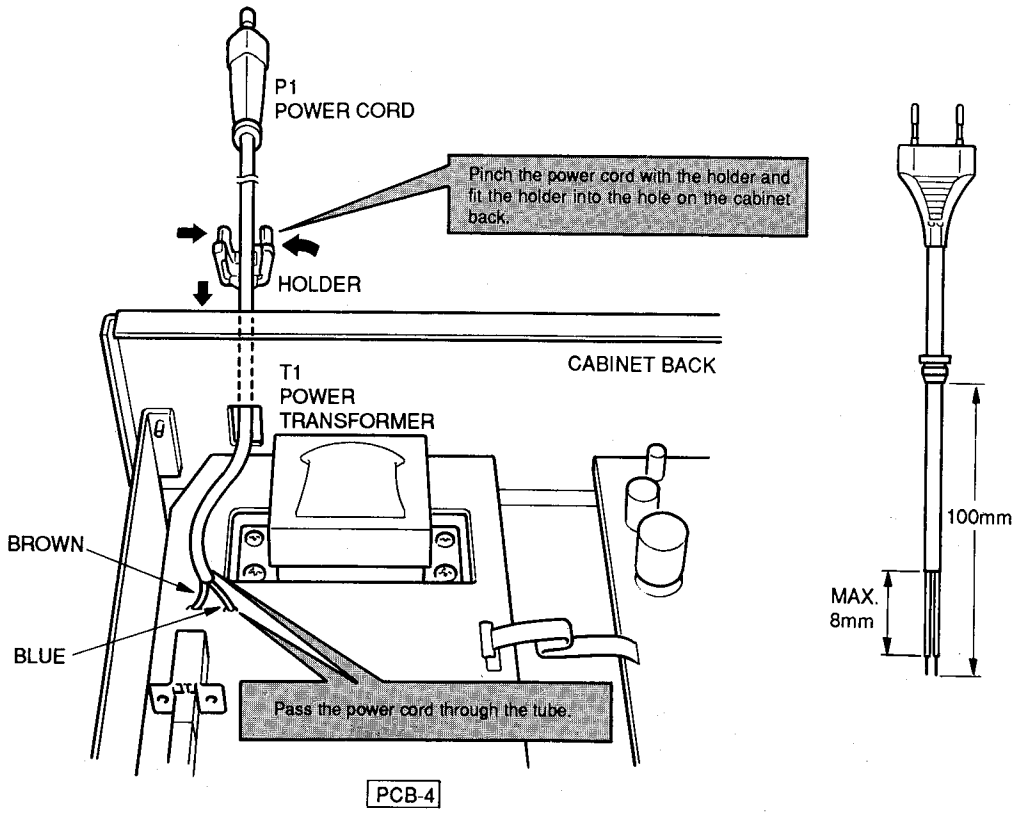

BLOCK DIAGRAM

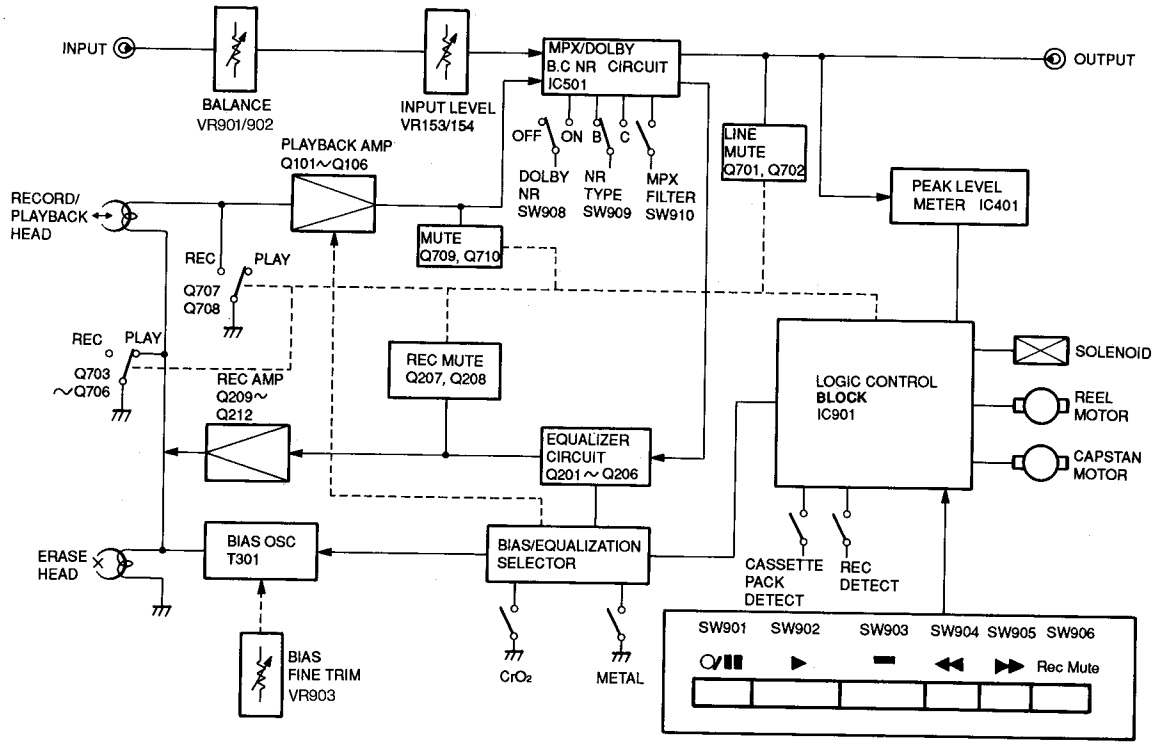

CIRCUIT DESCRIPTION

PLAYBACK SIGNAL

The signal from the playback head is amplified by the playback amplifier Q101, Q103 and Q105 (L ch.), and is applied to the pins 2 (L ch.) and 29 (R ch.) of the Dolby NR IC501 (B/C type). Switching of the playback signal from the record mode (external input signal) to the playback mode is performed inside IC501.

IC501 is usually switched to the playback mode. However, the control signal transmitted to the pin 5 of IC501 from IC901 through Q505 and Q506 switches IC501 from the record mode to the playback mode. The input signal to IC501 is output from the pins 6 (L ch.) and 25 (R ch.) and applied to the OUTPUT jack and the PEAK LEVEL METER circuit. The characteristics of the playback equalizer are defined by the BIAS/EQUALIZATION switch and are selected and specified in Q107 (L ch.) and Q108 (R ch.)

RECORD SIGNAL

The signal from the INPUT jack is controlled by the INPUT LEVEL control and BALANCE control and is applied to pins 1 (L ch.) and 30 (R ch.) of the Dolby NR IC501 (B/C type). Switching of the record signal from the playback mode to the record mode is performed inside IC501. The control signal transmitted to the pin 5 of IC501 from IC901 through Q505 and Q506 switches IC501 from the playback mode to the record mode.

The input signal to the Dolby NR IC is output from pins 3 (L ch.) and 28 (R ch.) of IC501 and passes through the MPX filter. Then it is input to the pins 4 (L ch.) and 27 (R ch.) and is output from the pins 7 (L ch.) and 24 (R ch.). The signal output from IC501 passes through the record equalizer circuit and is amplified by the record amplifier of Q210 and Q212 (L ch.), Q209 and Q211 (R ch.). The amplified signal is then applied to the recording head after being synthesized by a bias signal.

MUTING OPERATION

The signal that mutes the sound produced at switching to recording or playback is applied from IC901 of the logic control block.

When the "STOP" button is pressed, the mute signal output from the pin 28 of IC901 turns ON Q701 (L ch.) and Q702 (R ch.) to short-circuit the output signals of the playback amplifiers for muting. For the purpose of preventing generation of noise at power ON/OFF, the mute signal is output from Q51. The muting is done by short circuiting the output signal with Q701 (L ch.) and Q702 (R ch.) turned ON.

LOGIC FOR RECORD MODE

When the "REC" button is pressed, the pin 27 of IC901 becomes high level and Q709 (L ch.) and Q710 (R ch.) turn ON. The input to the Dolby NR IC is muted. Also Q713 and Q712 turn ON and Q711 turns OFF. Therefore Q703, Q705 (L ch.) and Q704, Q706 (R ch.) turn OFF to release the muting of the outputs from the record amplifiers.

Also, Q505 turns ON and Q506 turns OFF to make the pin 5 of IC501 high level. Therefore the mode is switched to the record mode.

LOGIC FOR RECORD TO PLAYBACK MODE

When the "STOP", "PAUSE" or "PLAY" button is pressed, the pin 26 of IC901 becomes high level. Q215 turns ON and Q208 (L ch.), Q207 (R ch.) turn ON to mute the inputs to the record amplifiers. Also, Q713 and Q714 turn OFF and Q711 turns ON to turn ON Q703, Q705 (L ch.) and Q704, Q706 (R ch.). Therefore the outputs from the record amplifiers are muted.

Also, Q505 turns OFF and Q506 turns ON to make the pin 5 of IC501 low level. Therefore the mode is switched to the playback mode.

TIMING CHART

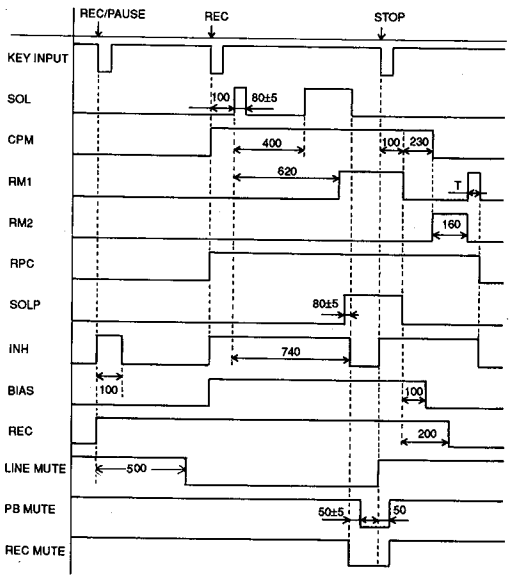

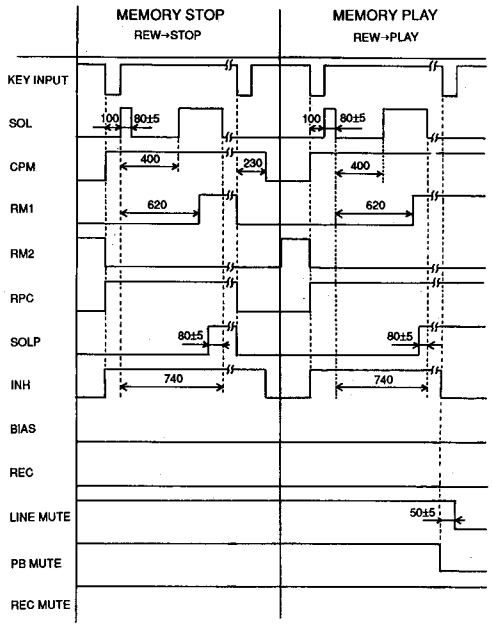

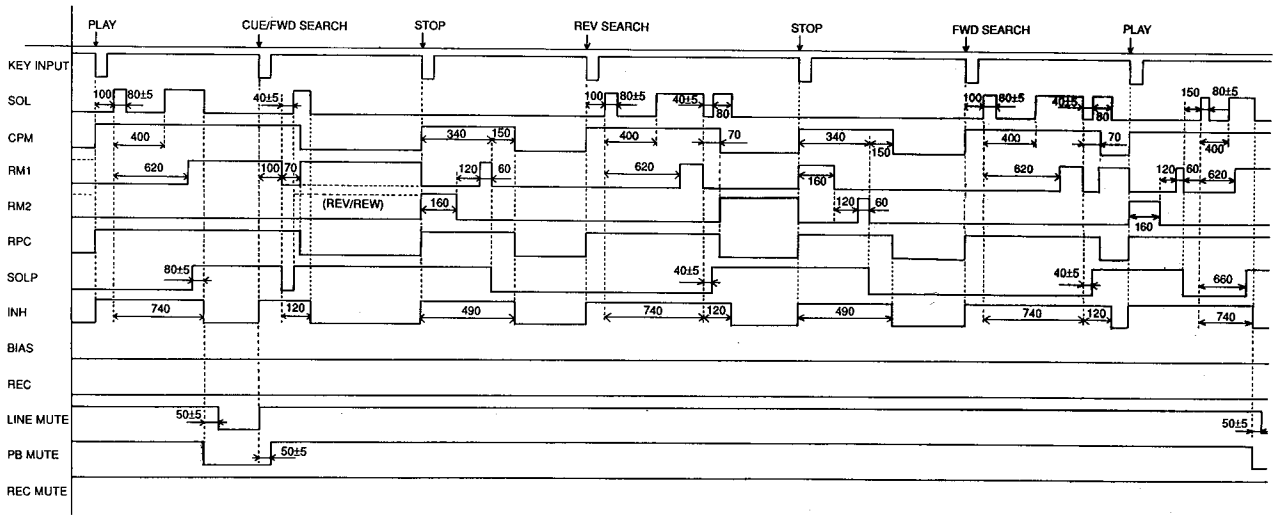

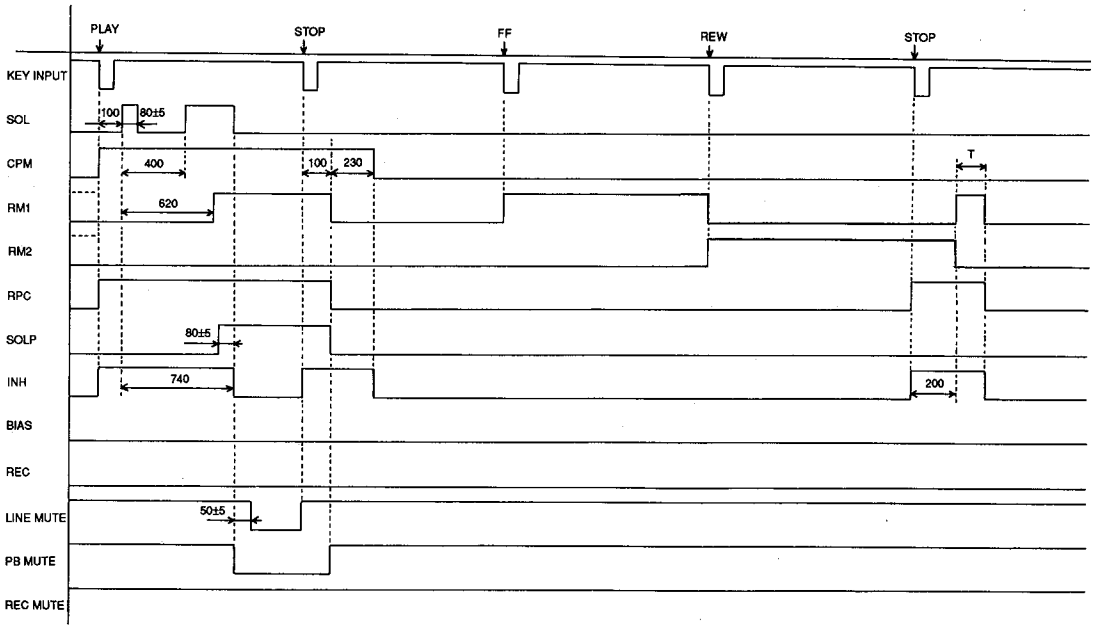

ALIGNMENT PROCEDURES (REFER TO PAGES 12, 13, 20 AND 21)

■ CASSETTE MECHANISM CONFIRMATION

Make sure to confirm conditons of the cassette mechanism as follows before adjustment.

1. Confirmation of erase prevention function

- The switch should turn ON when a tape with erroneous erase preventive pawl is inserted. (Use a tape which is 0.2mm smaller than the minimum size of 62.9mm or a MAZ-0184-C gauge one.)

2. Confirmation of cassette pack detection function

- The switch should turn ON when a tape is inserted. (Use a tape whose minimum size is 63.5mm or a MAZ-0184-C gauge one.)
- When the switch arm is moved back gradually from the ON position, the switch should turn OFF.

3. Confirmation of eject function

- The cassette compartment opens smoothly and no abnormal noise should be heard while opening and closing.
- The eject lock arm opens smoothly without contacting the chassis and damper.
- The eject button can not be pressed during playback.

4. Confirmation of playback, fast forward and rewind functions

- The torque used in each of the playback, fast forward and rewind modes should be within specification.
  - Playback ..... 35gr.cm~70gr.cm
  - FastForward ..... 70gr.cm~150gr.cm
  - Rewind ..... 70gr.cm~150gr.cm
- No abnormal noise should be heard during operation in any mode. The solenoid switching sound should not be considered as a noise.

5. Confirmation of positions of record/playback head and erase head

- Head height
  a) Set the M-300 head gauge.
  b) Set the unit in the playback mode and place the adjustment chip on the head gauge as shown in the Fig. 1.
  c) The adjustment chip should not contact the tape guide of both record/playback head and erase head.

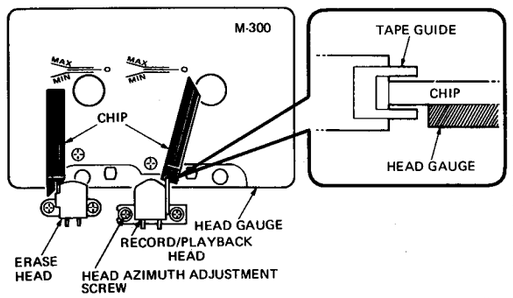

Fig. 1

- Head position
  a) Set the M-300 head gauge.
  b) Set the unit in the playback mode and place the adjustment chip on the head gauge as shown in the Fig. 2.
  c) With both record/playback head and erase head, the adjustment chip should be between MIN and MAX of the M-300 head gauge.

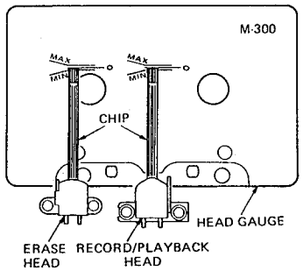

Fig. 2

■ ELECTRICAL ADJUSTMENT AND CONFIRMATION

1. Before adjustment

- Before electrical adjustment, make sure that confirmations of the cassette mechanism are all completed.
- After the power switch is pushed on, wait for 10 minutes before measuring to be sure of the most stable operation.
- Since head magnetization, dust accumulations, etc. are likely to introduce errors in the various characteristics, it is very important that the heads are properly demagnetized and cleaned before commencing any adjustment, particularly frequency response and head azimuth adjustment.

2. Instruments required

- Low frequency oscillator
- AC VTVM or dual channel AC VTVM
- Oscilloscope
- Wow/flutter meter
- Frequency counter
- Distortion meter

3. Test tapes

- Azimuth adjustment ..... MTT-114 or TCC-153
- Tape speed adjustment ..... MTT-111DN or TCC-112
- Playback output level adjustment ..... TCC-130 or MTT-150
- Playback frequency characteristic confirmation
  ..... TCC-1216 or TCC-162C and TCC-262C
- Music search adjustment SCC-1425
- Reference tapes
  LN SCC-502
  CrO_2 ..... SCC-1360
  METAL SCC-565

Note:
C-90 differes with C-60 in the thickness and bias is of unequal, so adjust with the tape whose bias in of specified value.

4. General conditions (unless otherwise noted)

Controls and Switches	Settings
Dolby NR	Off
Input Level	Maximum
MPX Filter	Off
Bias Fine Trim	Center
Balance	Center

Azimuth Adjustment

When the maximum level point of R channel does not equal that L channel, connect the oscilloscope as shown in Fig. 3 and proceed with azimuth adjustment so that L and R channels are in phase.

a) Connect L channel tape out to "X (or V)" and R channel to "Y (or H)". Observe the lissajouss waveform.
b) Set L and R channels to monaural. Adjust vertical and horizontal gain so that the waveform becomes 45 degree.
c) Adjust azimuth so that the measurement of "a" becomes maximum and the measurement of "b" becomes minimum against the 45 degree line.

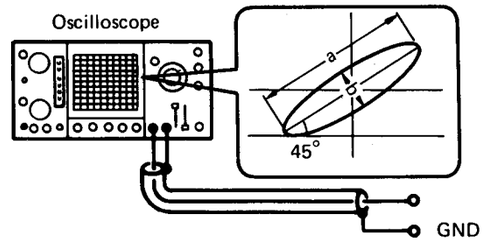

Fig. 3

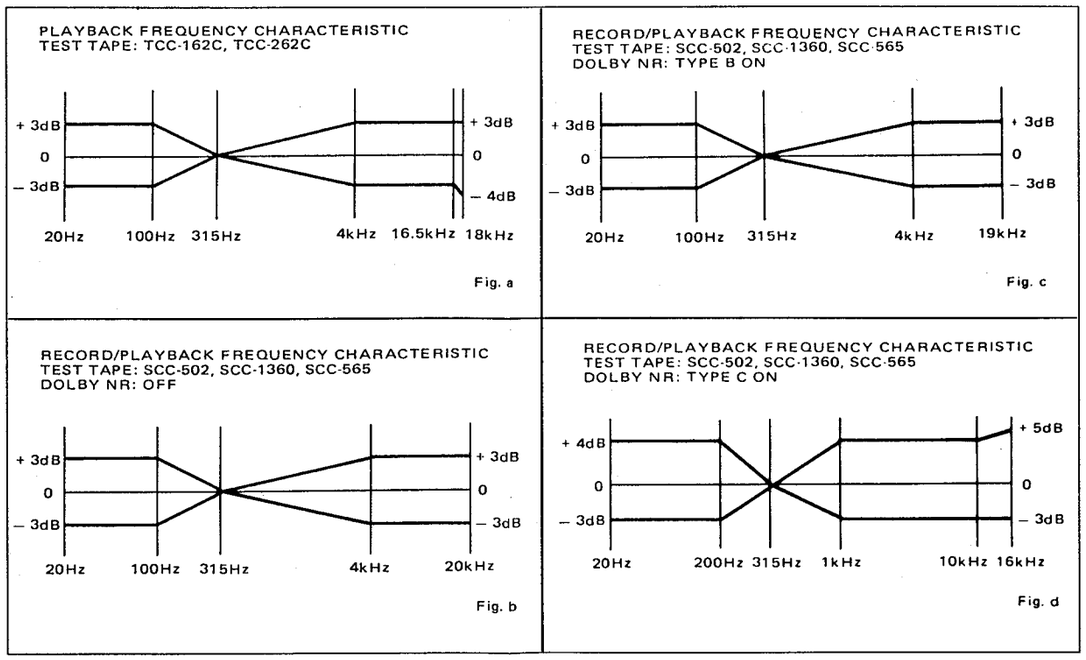

ALIGNMENT PROCEDURES (REFER TO PAGES 12, 13, 20 AND 21)

■ CASSETTE MECHANISM CONFIRMATION

Make sure to confirm conditons of the cassette mechanism as follows before adjustment.

1. Confirmation of erase prevention function

- The switch should turn ON when a tape with erroneous erase preventive pawl is inserted. (Use a tape which is 0.2mm smaller than the minimum size of 62.9mm or a MAZ-0184-C gauge one.)

2. Confirmation of cassette pack detection function

- The switch should turn ON when a tape is inserted. (Use a tape whose minimum size is 63.5mm or a MAZ-0184-C gauge one.)
- When the switch arm is moved back gradually from the ON position, the switch should turn OFF.

3. Confirmation of eject function

- The cassette compartment opens smoothly and no abnormal noise should be heard while opening and closing.
- The eject lock arm opens smoothly without contacting the chassis and damper.
- The eject button can not be pressed during playback.

4. Confirmation of playback, fast forward and rewind functions

- The torque used in each of the playback, fast forward and rewind modes should be within specification.
  - Playback ..... 35gr.cm~70gr.cm
  - FastForward ..... 70gr.cm~150gr.cm
  - Rewind ..... 70gr.cm~150gr.cm
- No abnormal noise should be heard during operation in any mode. The solenoid switching sound should not be considered as a noise.

5. Confirmation of positions of record/playback head and erase head

- Head height
  a) Set the M-300 head gauge.
  b) Set the unit in the playback mode and place the adjustment chip on the head gauge as shown in the Fig. 1.
  c) The adjustment chip should not contact the tape guide of both record/playback head and erase head.

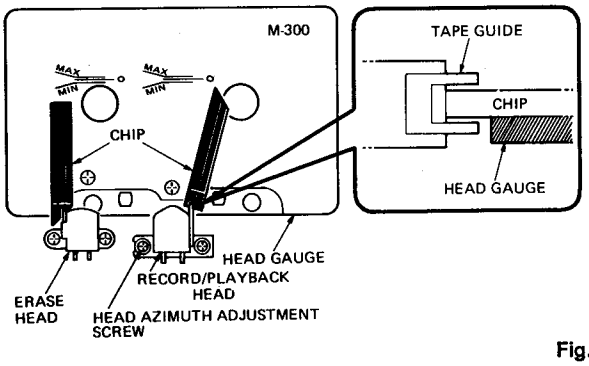

Fig. 1

- Head position
  a) Set the M-300 head gauge.
  b) Set the unit in the playback mode and place the adjustment chip on the head gauge as shown in the Fig. 2.
  c) With both record/playback head and erase head, the adjustment chip should be between MIN and MAX of the M-300 head gauge.

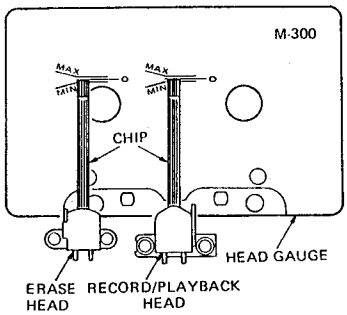

Fig. 2

■ ELECTRICAL ADJUSTMENT AND CONFIRMATION

1. Before adjustment

- Before electrical adjustment, make sure that confirmations of the cassette mechanism are all completed.
- After the power switch is pushed on, wait for 10 minutes before measuring to be sure of the most stable operation.
- Since head magnetization, dust accumulations, etc. are likely to introduce errors in the various characteristics, it is very important that the heads are properly demagnetized and cleaned before commencing any adjustment, particularly frequency response and head azimuth adjustment.

2. Instruments required

- Low frequency oscillator
- AC VTVM or dual channel AC VTVM
- Oscilloscope
- Wow/flutter meter
- Frequency counter
- Distortion meter

3. Test tapes

- Azimuth adjustment ..... MTT-114 or TCC-153
- Tape speed adjustment ..... MTT-111DN or TCC-112
- Playback output level adjustment ..... TCC-130 or MTT-150
- Playback frequency characteristic confirmation ..... TCC-1216 or TCC-162C and TCC-262C
- Music search adjustment SCC-1425
- Reference tapes
  LN SCC-502
  CrO_2 ..... SCC-1360
  METAL SCC-565

Note:
C-90 differes with C-60 in the thickness and bias is of unequal, so adjust with the tape whose bias in of specified value.

4. General conditions (unless otherwise noted)

Controls and Switches	Settings
Dolby NR	Off
Input Level	Maximum
MPX Filter	Off
Bias Fine Trim	Center
Balance	Center

Azimuth Adjustment

When the maximum level point of R channel does not equal that L channel, connect the oscilloscope as shown in Fig. 3 and proceed with azimuth adjustment so that L and R channels are in phase.

a) Connect L channel tape out to "X (or V)" and R channel to "Y (or H)". Observe the lissajouss waveform.
b) Set L and R channels to monaural. Adjust vertical and horizontal gain so that the waveform becomes 45 degree.
c) Adjust azimuth so that the measurement of "a" becomes maximum and the measurement of "b" becomes minimum against the 45 degree line.

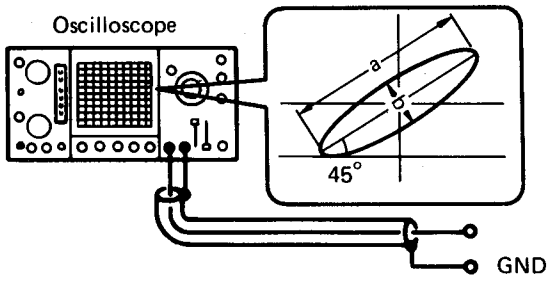

Fig. 3

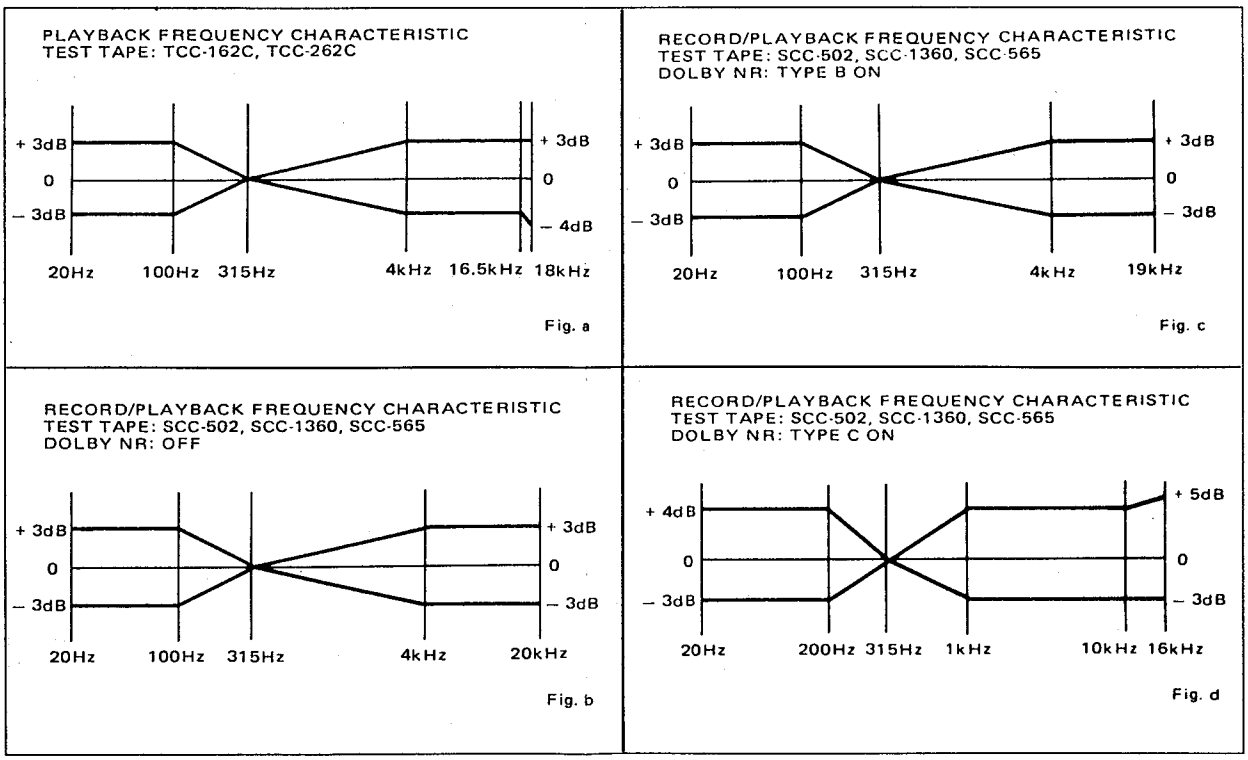

Step	Alignment	Instrument Required	Input Signal	Mode	Test Point	Adjustment	For
1	Azimuth	VTVM Oscilloscope Test tape (MTT-114 or TCC-153)		PB	TP501 (Lch), GND TP502 (Rch), GND or OUTPUT jack	Azimuth screw	Maximum output Refer to "Azimuth Adjustment" on page 7.
2	Tape speed	Frequency counter Test tape (MTT-111DN or TCC-112)		PB	TP501 (Lch), GND TP502 (Rch), GND	VR (built in motor)	3000Hz ± 10Hz Adjust at the center of test tape.
3	Playback output level	VTVM Test tape (TCC-130 or MTT-150)		PB	TP501 (Lch), GND TP502 (Rch), GND	VR101 (Lch) VR102 (Rch)	775mV Tape selector is LN position.
4	Playback frequency characteristic confirmation	VTVM Test tape (TCC-1216 or TCC-162C and TCC-262C)		PB	TP501 (Lch), GND TP502 (Rch), GND or OUTPUT jack	R129, R130 R131, R132 R133, R134	Unsolder resistors of R129 and R130, R131 and R132, or R133 and R134 so that the frequency response is within the range as shown in Fig. a.
5	Music search	VTVM Oscilloscope Test tape (SCC-1425)		FORWARD SEARCH	TP701, GND	VR751	1.6 ±0.05V 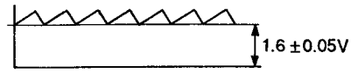
6	Bias frequency confirmation	Frequency counter		REC/PB	TP101 (Lch), GND TP102 (Rch), GND	T301	105kHz ± 3kHz Tape selector is METAL position.
7	Dolby HX PRO	VTVM		REC/PB Bias Trim High Cut VR301,302 Bias MAX	TP101 (Lch), GND TP102 (Rch), GND	L301 L302	Maximum output Tape selector is METAL position. After adjustment for L301 and L302, set bias fine trim (VR301 and VR302) to the center position.
8	Bias trap	VTVM		REC/PB	TP201 (Rch), GND TP202 (Lch), GND	LC201, LC202 LC203, LC204	Minimum output Tape selector is METAL position.
9 - 1	Bias level (pre-adjustment)	VTVM		REC/PB	TP101 (Lch), GND TP102 (Rch), GND	VR301 VR302	85mV Tape selector is METAL position.
9 - 2						VR305 VR306	55mV Tape selector is CrO_2 position.
9 - 3						VR303 VR304	33mV Tape selector is LN position.
10	Record level (pre-adjustment)	VTVM Blank tapes CrO_2 SCC-1360 METAL SCC-565 LN SCC-502	Apply 1kHz signal to INPUT jack. Set INPUT LEVEL knob so that TP501 and TP502 to GND voltage is 775mV in REC-PAUSE mode.	REC/PB	TP501 (Lch), GND TP502 (Rch), GND	VR201, VR202 VR301, VR302	388mV Tape selector is METAL position. Adjust VR301 and VR302 so that the distortioon becomes 1.1%~1.4%
						VR303, VR304 (CrO_2) VR305, VR306 (LN)	388mV Adjust VR303 and VR304 so that the distortion becomes 1.3% (CrO_2). Adjust VR305 and VR306 so that the distortion becomes 1.0% (LN). This confirmation should be at each tape selector position.
11 - 1	Record/playback equalizer frequency characteristic	VTVM Blank tapes CrO_2 SCC-1360 METAL SCC-565 LN SCC-502	Apply 1kHz signal to INPUT jack. Set INPUT LEVEL knob so that TP501 and TP502 to GND voltage is 25dB below 775mV in REC-PAUSE mode. Then adjust with a 20Hz to 30kHz sweep signal.	REC/PB	OUTPUT jack	VR303, VR304 L201, L202 (VR301, VR302)	So that the record/playback frequency response is flat (at least within the range in Fig. b). Tape selector is CrO_2 position.
11 - 2						VR301 VR302	So that the record/playback frequency response is flat (at least within the range in Fig. b). Tape selector is METAL position.
11 - 3						VR305, VR306 L201, L202 (VR301, VR302)	So that the record/playback frequency response is flat (at least within the range in Fig. b). Tape selector is LN position.
12	Record level	VTVM Blank tapes CrO_2 SCC-1360 METAL SCC-565 LN SCC-502	Set INPUT LEVEL knob so that TP501 and TP502 to GND voltage is 775mV in REC-PAUSE mode.	REC/PB	TP501 (Lch), GND TP502 (Rch), GND	VR201 VR202	775mV Perform adjustment using CrO_2. Perform checking only for LN and METAL tapes.
13	Meter level	VTVM	Apply 1kHz signal to INPUT jack. Set INPUT LEVEL knob so that TP501 and TP502 to GND voltage is 1.5dB below 775mV.	REC-PAUSE	PEAK LEVEL METER	VR401 VR402	Confirm peak level meter reads: –1 dB.
14	MPX filter characteristic confirmation	VTVM	Apply 19kHz, 15kHz and 1kHz signal to INPUT jack. Set INPUT LEVEL knob so that TP501 and TP502 to GND voltage is 775mV.	REC-PAUSE MPX filter ON	TP501 (Lch), GND TP502 (Rch), GND or OUTPUT jack	LC501 LC502	Adjust for -0.3 dB at 15kHz and >30 dB at 19kHz.
15	Record/playback equalizer frequency characteristic confirmation	VTVM Blank tapes CrO_2 SCC-1360 METAL SCC-565 LN SCC-502	Apply 1kHz signal to INPUT jack. Set INPUT LEVEL knob so that TP501 and TP502 to GND voltage is 25dB below 775mV in REC-PAUSE mode. Then adjust with a 20Hz to 30kHz sweep signal.	REC/PB	OUTPUT jack		Perform checking with Dolby B and C NR ON at each tape selector position. Confirm the record/playback frequency characteristic is within ± 3 dB at 20Hz to 20 kHz.

Step	Alignment	Instrument Required	Input Signal	Mode
1	Azimuth	VTVM Oscilloscope Test tape (MTT-114 or TCC-153)		PB
2	Tape speed	Frequency counter Test tape (MTT-111DN or TCC-112)		PB
3	Playback output level	VTVM Test tape (TCC-130 or MTT-150)		PB
4	Playback frequency characteristic confirmation	VTVM Test tape (TCC-1216 or TCC-162C and TCC-262C)		PB
5	Music search	VTVM Oscilloscope Test tape (SCC-1425)		FORWA SEARC
6	Bias frequency confirmation	Frequency counter		REC/PE
7	Dolby HX PRO	VTVM		REC/PE Bias Tri High Cu VR301, Bias MA
8	Bias trap	VTVM		REC/PE
9 - 1, 2, 3	Bias level (pre-adjustment)	VTVM		REC/PE
10	Record level (pre-adjustment)	VTVM Blank tapes CrO_2 SCC-1360 METAL SCC-565 LN SCC-502	Apply 1kHz signal to INPUT jack. Set INPUT LEVEL knob so that TP501 and TP502 to GND voltage is 775mV in REC-PAUSE mode.	REC/PE
11 - 1, 2, 3	Record/playback equalizer frequency characteristic	VTVM Blank tapes CrO_2 SCC-1360 METAL SCC-565 LN SCC-502	Apply 1kHz signal to INPUT jack. Set INPUT LEVEL knob so that TP501 and TP502 to GND voltage is 25dB below 775mV in REC-PAUSE mode. Then adjust with a 20Hz to 30kHz sweep signal.	REC/PE
12	Record level	VTVM Blank tapes CrO_2 SCC-1360 METAL SCC-565 LN SCC-502	Set INPUT LEVEL knob so that TP501 and TP502 to GND voltage is 775mV in REC-PAUSE mode.	REC/PE
13	Meter level	VTVM	Apply 1kHz signal to INPUT jack. Set INPUT LEVEL knob so that TP501 and TP502 to GND voltage is 1.5dB below 775mV.	REC- PAUSE
14	MPX filter characteristic confirmation	VTVM	Apply 19kHz, 15kHz and 1kHz signal to INPUT jack. Set INPUT LEVEL knob so that TP501 and TP502 to GND voltage is 775mV.	REC- PAUSE MPX fil ON
15	Record/playback equalizer frequency characteristic confirmation	VTVM Blank tapes CrO_2 SCC-1360 METAL SCC-565 LN SCC-502	Apply 1kHz signal to INPUT jack. Set INPUT LEVEL knob so that TP501 and TP502 to GND voltage is 25dB below 775mV in REC-PAUSE mode. Then adjust with a 20Hz to 30kHz sweep signal.	REC/PE

Mode	Test Point	Adjustment	For
PB	TP501 (Lch), GND TP502 (Rch), GND or OUTPUT jack	Azimuth screw	Maximum output Refer to "Azimuth Adjustment" on page 7.
PB	TP501 (Lch), GND TP502 (Rch), GND	VR (built in motor)	3000Hz ± 10Hz Adjust at the center of test tape.
PB	TP501 (Lch), GND TP502 (Rch), GND	VR101 (Lch) VR102 (Rch)	775mV Tape selector is LN position.
PB	TP501 (Lch), GND TP502 (Rch), GND or OUTPUT jack	R129, R130 R131, R132 R133, R134	Unsolder resistors of R129 and R130, R131 and R132, or R133 and R134 so that the frequency response is within the range as shown in Fig. a.
FORWARD SEARCH	TP701, GND	VR751	1.6 ±0.05V 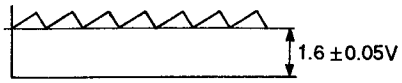
REC/PB	TP101 (Lch), GND TP102 (Rch), GND	T301	105kHz ± 3kHz Tape selector is METAL position.
REC/PB Bias Trim High Cut VR301,302 Bias MAX	TP101 (Lch), GND TP102 (Rch), GND	L301 L302	Maximum output Tape selector is METAL position. After adjustment for L301 and L302, set bias fine trim (VR301 and VR302) to the center position.
REC/PB	TP201 (Rch), GND TP202 (Lch), GND	LC201, LC202 LC203, LC204	Minimum output Tape selector is METAL position.
REC/PB	TP101 (Lch), GND TP102 (Rch), GND	VR301 VR302	85mV Tape selector is METAL position.
		VR305 VR306	55mV Tape selector is CrO_2 position.
		VR303 VR304	33mV Tape selector is LN position.
REC/PB	TP501 (Lch), GND TP502 (Rch), GND	VR201, VR202 VR301, VR302	388mV Tape selector is METAL position. Adjust VR301 and VR302 so that the distortioon becomes 1.1%~1.4%
		VR303, VR304 (CrO_2) VR305, VR306 (LN)	388mV Adjust VR303 and VR304 so that the distortion becomes 1.3% (CrO_2). Adjust VR305 and VR306 so that the distortion becomes 1.0% (LN). This confirmation should be at each tape selector position.
REC/PB	OUTPUT jack	VR303, VR304 L201, L202 (VR301, VR302)	So that the record/playback frequency response is flat (at least within the range in Fig. b). Tape selector is CrO_2 position.
		VR301 VR302	So that the record/playback frequency response is flat (at least within the range in Fig. b). Tape selector is METAL position.
		VR305, VR306 L201, L202 (VR301, VR302)	So that the record/playback frequency response is flat (at least within the range in Fig. b). Tape selector is LN position.
REC/PB	TP501 (Lch), GND TP502 (Rch), GND	VR201 VR202	775mV Perform adjustment using CrO_2. Perform checking only for LN and METAL tapes.
REC-PAUSE	PEAK LEVEL METER	VR401 VR402	Confirm peak level meter reads: –1 dB.
REC-PAUSE MPX filter ON	TP501 (Lch), GND TP502 (Rch), GND or OUTPUT jack	LC501 LC502	Adjust for -0.3 dB at 15kHz and >30 dB at 19kHz.
REC/PB	OUTPUT jack		Perform checking with Dolby B and C NR ON at each tape selector position. Confirm the record/playback frequency characteristic is within ± 3 dB at 20Hz to 20 kHz.

GENERAL UNIT
EXPLODED VIEW

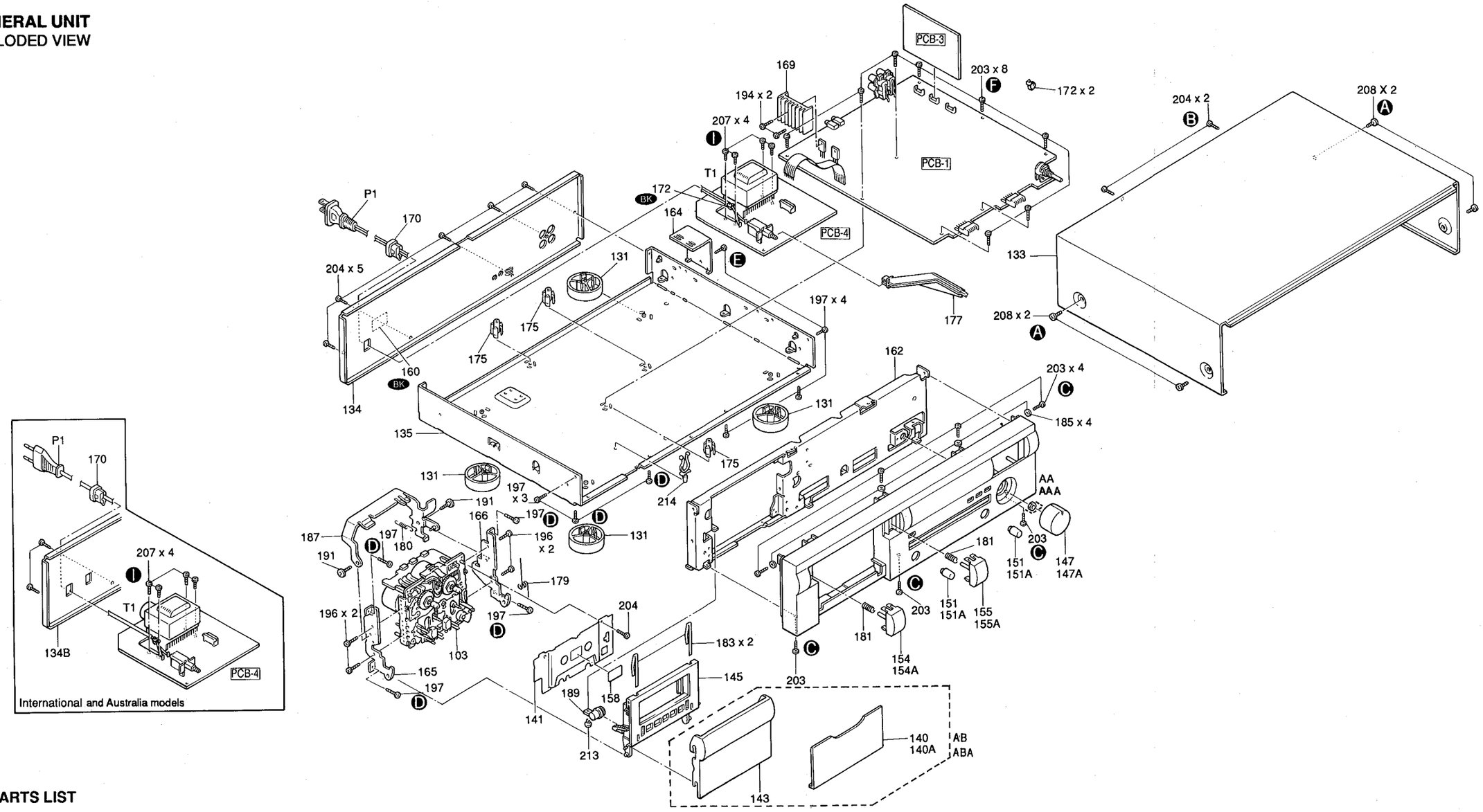

PARTS LIST

Ref. No.	Part No.	Description
AA	A442-TD4400A	FRONT PANEL ASS'Y (I)
AAA	A442-TD4400B	FRONT PANEL ASS'Y (BK) (IB) (BB)
AB	A512-TD4400A	PLATE ASS'Y (I)
ABA	A512-TD4400B	PLATE ASS'Y (BK) (IB) (BB)
103	3112-15902	CASSETTE TAPE RECORDER MECHANISM ASS'Y
131	1319-03301	LEG
133	1414-15901	CABINET, TOP COVER
134	1424-31602	CABINET BACK, REAR (BK)
134B	1424-31606	CABINET BACK, REAR (I) (IB) (BB)
135	1424-31701	CABINET BACK, BOTTOM
140	1512-06806	PLATE (I)
140A	1512-06802	PLATE (BK) (IB) (BB)
141	1514-23201	PLATE
143	1532-19501	WINDOW
145	1612-07401	CASSETTE LID

Ref. No.	Part No.	Description
147	1630-04302	ROTARY KNOB (I)
147A	1630-04301	ROTARY KNOB (BK) (IB) (BB)
151	1632-20402	ROTARY KNOB (I)
151A	1632-20401	ROTARY KNOB (BK) (IB) (BB)
154	1662-58403	PUSH BUTTON (I)
154A	1662-58401	PUSH BUTTON (BK) (IB) (BB)
155	1662-58404	PUSH BUTTON (I)
155A	1662-58402	PUSH BUTTON (BK) (IB) (BB)
158	1741-01601	ORNAMENT
160	1756-CSA	LABEL (BK)
162	2211-7311	CHASSIS
164	2219-8285	METAL FITTING
165	2219-8286	METAL FITTING
166	2219-8287	METAL FITTING
169	2222-7281	HEAT SINK

Ref. No.	Part No.	Description
170	2240-364	HOLDER
172	2240-R0101	HOLDER
175	2360-7022	BOSS
177	2601-7192	SHAFT
179	2651-047	SPRING
180	2651-11212	SPRING, LEVER
181	2651-2101732	SPRING
183	2652-105	LEAF SPRING
185	2411-30Z1	WASHER, PLAIN
187	2672-7043	LEVER
189	2692-016	DAMPER
191	2320-044	SCREW
194	2327-R0130082	SCREW (3 x 8mm)
196	2347-260527	SCREW (2.6 x 5mm)
197	2347-R0130062	SCREW (3 x 6mm)

Ref. No.	Part No.	Description
203	2347-R0130082	SCREW (3 x 8mm)
204	2347-R0130084	SCREW (3 x 8mm)
207	2347-R0140062	SCREW (4 x 6mm)
208	2347-R0140064	SCREW (4 x 6mm)
213	2459-3005511	RIVET, PLASTIC
214	2240-7049	HOLDER
⚠ P1	4161-71151	CORD W/PLUG (BK)
⚠ P1	4161-7256	CORD W/PLUG (I) (IB)
⚠ P1	4161-04100	CORD W/PLUG (BB)
⚠ T1	5584-S8201	XFORMER, POWER (BK)
⚠ T1	5584-S8202	XFORMER, POWER (I) (IB) (BB)

NOTE
⚠ SAFETY RELATED COMPONENT. USE ONLY EXACT REPLACEMENT PART AS SPECIFIED.

GENERAL UNIT
EXPLODED VIEW

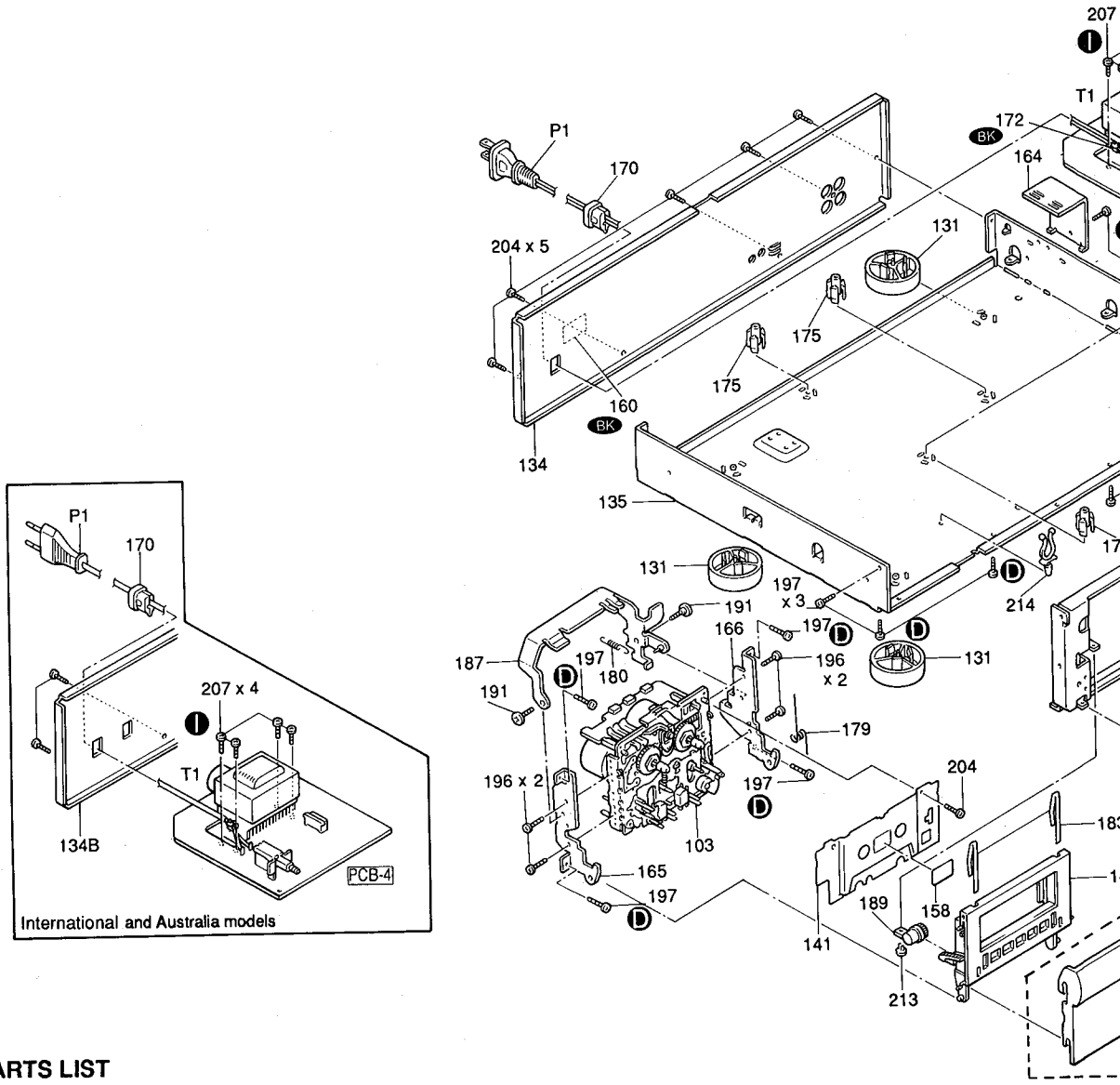

PARTS LIST

Ref. No.	Part No.	Description
AA	A442-TD4400A	FRONT PANEL ASS'Y I
AAA	A442-TD4400B	FRONT PANEL ASS'Y BK IB BB
AB	A512-TD4400A	PLATE ASS'Y I
ABA	A512-TD4400B	PLATE ASS'Y BK IB BB
103	3112-15902	CASSETTE TAPE RECORDER MECHANISM ASS'Y
131	1319-03301	LEG
133	1414-15901	CABINET, TOP COVER
134	1424-31602	CABINET BACK, REAR BK
134B	1424-31606	CABINET BACK, REAR I IB BB
135	1424-31701	CABINET BACK, BOTTOM
140	1512-06806	PLATE I
140A	1512-06802	PLATE BK IB BB
141	1514-23201	PLATE
143	1532-19501	WINDOW
145	1612-07401	CASSETTE LID

Ref. No.	Part No.	Description
147	1630-04302	ROTARY KNOB I
147A	1630-04301	ROTARY KNOB BK IB BB
151	1632-20402	ROTARY KNOB I
151A	1632-20401	ROTARY KNOB BK IB BB
154	1662-58403	PUSH BUTTON I
154A	1662-58401	PUSH BUTTON BK IB BB
155	1662-58404	PUSH BUTTON I
155A	1662-58402	PUSH BUTTON BK IB BB
158	1741-01601	ORNAMENT
160	1756-CSA	LABEL BK
162	2211-7311	CHASSIS
164	2219-8285	METAL FITTING
165	2219-8286	METAL FITTING
166	2219-8287	METAL FITTING
169	2222-7281	HEAT SINK

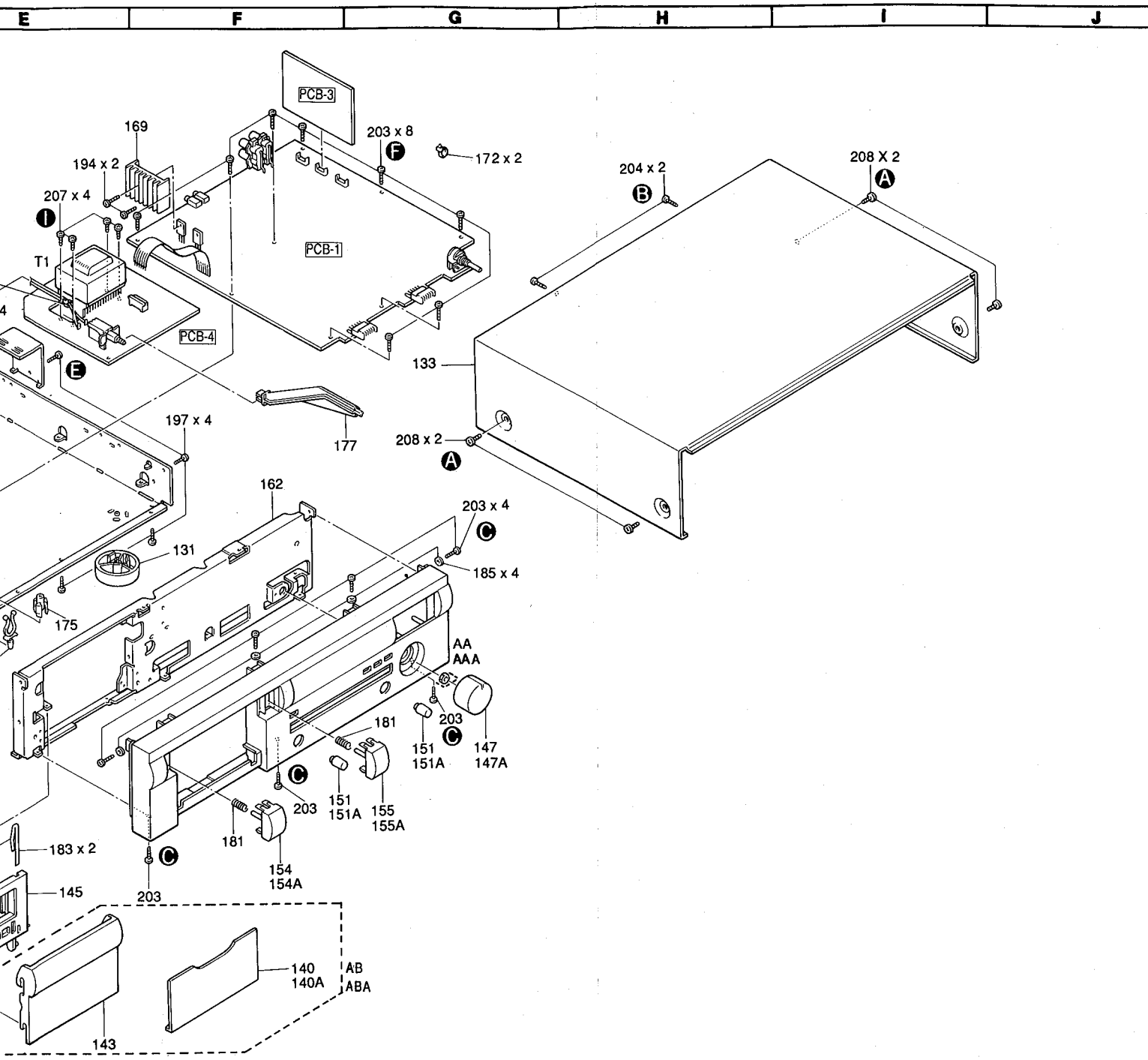

Ref. No.	Part No.	Description
170	2240-364	HOLDER
172	2240-R0101	HOLDER
175	2360-7022	BOSS
177	2601-7192	SHAFT
179	2651-047	SPRING
180	2651-11212	SPRING, LEVER
181	2651-2101732	SPRING
183	2652-105	LEAF SPRING
185	2411-30Z1	WASHER, PLAIN
187	2672-7043	LEVER
189	2692-016	DAMPER
191	2320-044	SCREW
194	2327-R0130082	SCREW (3 x 8mm)
196	2347-260527	SCREW (2.6 x 5mm)
197	2347-R0130062	SCREW (3 x 6mm)

Ref. No.	Part No.	Description
203	2347-R0130082	SCREW (3 x 8mm)
204	2347-R0130084	SCREW (3 x 8mm)
207	2347-R0140062	SCREW (4 x 6mm)
208	2347-R0140064	SCREW (4 x 6mm)
213	2459-3005511	RIVET, PLASTIC
214	2240-7049	HOLDER
⚠ P1	4161-71151	CORD W/PLUG BK
⚠ P1	4161-7256	CORD W/PLUG I IB
⚠ P1	4161-04100	CORD W/PLUG BB
⚠ T1	5584-S8201	XFORMER, POWER BK
⚠ T1	5584-S8202	XFORMER, POWER I IB BB

NOTE

⚠ SAFETY RELATED COMPONENT. USE ONLY EXACT REPLACEMENT PART AS SPECIFIED.

EXPLODED VIEW

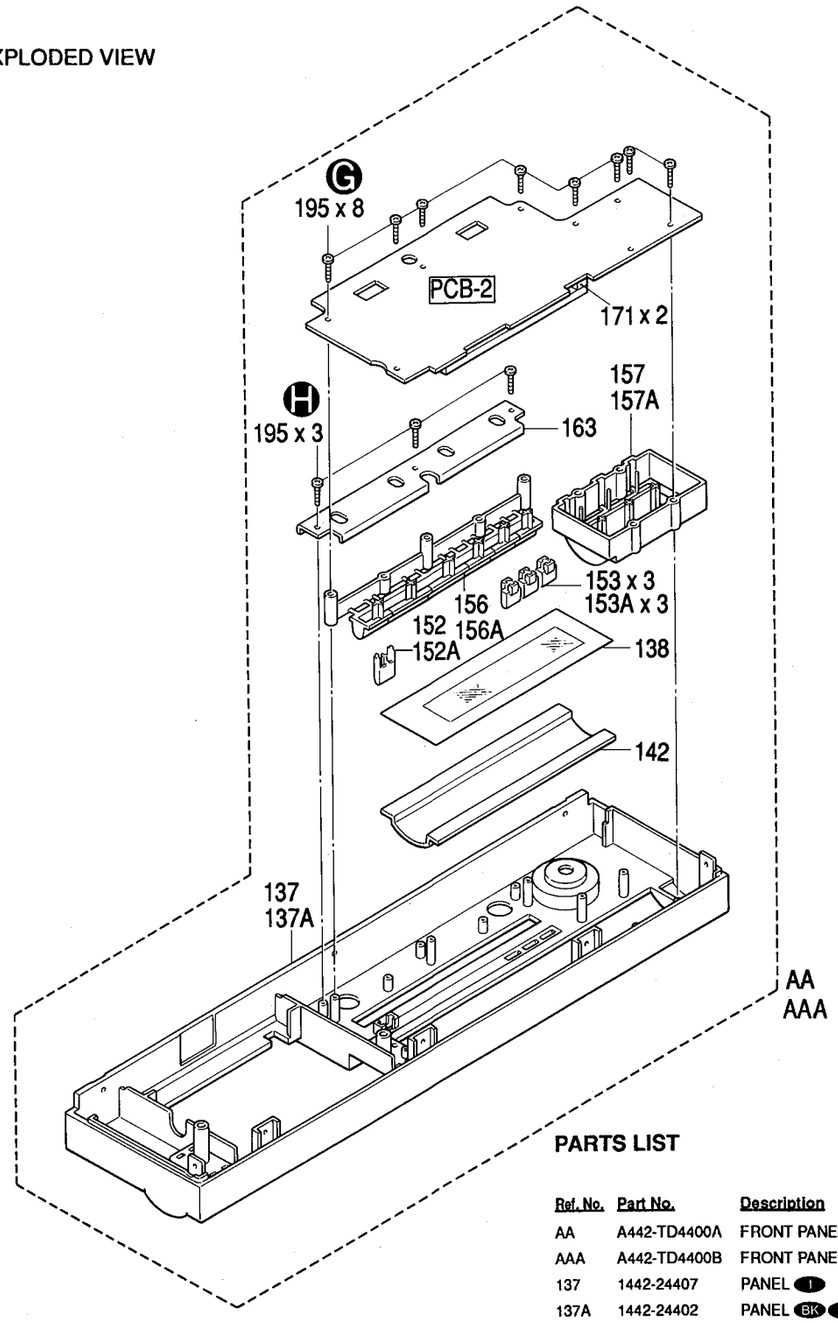

PARTS LIST

Ref. No.	Part No.	Description
AA	A442-TD4400A	FRONT PANEL ASS'Y (I)
AAA	A442-TD4400B	FRONT PANEL ASS'Y (BK) (IB) (BB)
137	1442-24407	PANEL (I)
137A	1442-24402	PANEL (BK) (IB) (BB)
138	1511-19806	PLATE
142	1532-17504	WINDOW
152	1662-36303	PUSH BUTTON (I)
152A	1662-36301	PUSH BUTTON (BK) (IB) (BB)
153	1662-52303	PUSH BUTTON (I)
153A	1662-52301	PUSH BUTTON (BK) (IB) (BB)
156	1662-58502	PUSH BUTTON (I)
156A	1662-58501	PUSH BUTTON (BK) (IB) (BB)
157	1662-51904	PUSH BUTTON (I)
157A	1662-51903	PUSH BUTTON (BK) (IB) (BB)
163	2219-8284	METAL FITTING
171	2240-7370	HOLDER
195	2347-R0126082	SCREW (2.6 x 8mm)

CASSETTE TAPE RECORDER MECHANISM

EXPLODED VIEW

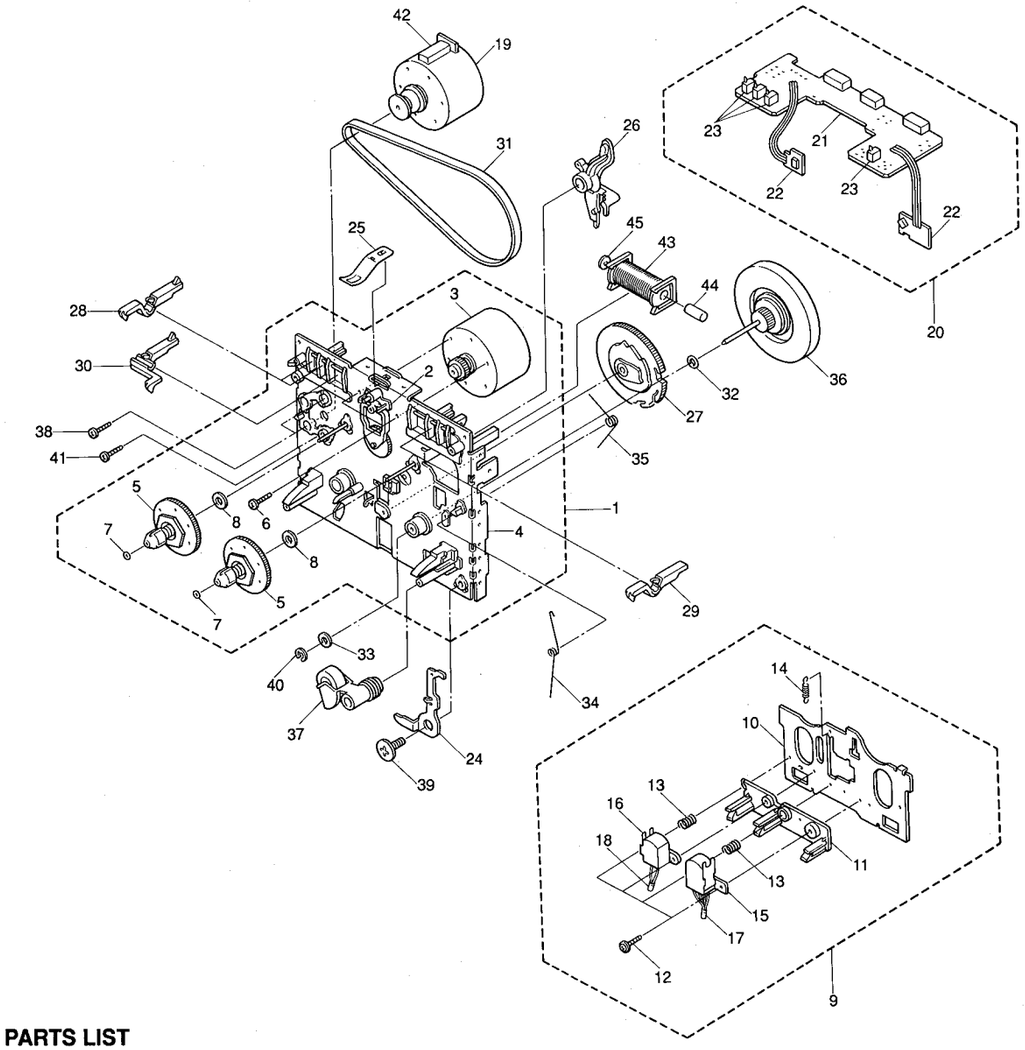

PARTS LIST

Ref. No.	Part No.	Description
1	F511-486	CHASSIS ASS'Y
2	F517-049	IDLER ASS'Y
3	F564-280	REEL MOTOR ASS'Y
4	F612-169	CHASSIS BASE ASS'Y
5	F623-037	REEL BASE ASS'Y
6	FG156-11A	SCREW (2.6 x 6.4 mm)
7	FJ111-17	NON-METAL WASHER (1.7 x 0.25 mm)
8	UJ12V-11	NON-METAL WASHER (2.1 x 0.25 mm)
9	F513-593	PLATE HEAD ASS'Y
10	FC52E-44	HEAD BASE
11	FD45T-15	HEAD SPACER
12	FG137-18	SCREW (2.0 x 9 mm)
13	FK21U-11	SPRING, AZIMUTH
14	FK26N-14	HEAD BASE SPRING
15	FU18K-13	REC/PB HEAD
16	FU192-11	ERASE HEAD
17	WH50S-06	WIRE CONNECTOR
18	WH42S-00	WIRE CONNECTOR
19	F525-269	CAPSTAN MOTOR
20	F567-362	RELAY P.C. BOARD ASS'Y
21	F743-103	RELAY P.C. BOARD
22	AZ15S-00	LEAF SWITCH
23	UE16E-11	PUSH SWITCH
24	FC39M-68	EJECT PREVENTION ARM
25	FC52H-12	SPRING, CASSETTE
26	FD45G-12	PLAY ARM ASS'Y
27	FD45B-14	CAM GEAR
28	FD44T-14	SWITCH ARM, REC
29	FD44Y-12	SWITCH ARM, PACK
30	FD44V-12	SWITCH ARM, METAL
31	FF17W-21	MAIN BELT
32	FJ111-30	NON-METAL WASHER (2.6 x 0.25 mm)
33	FJ111-14	NON-METAL WASHER (2.6 x 0.5 mm)
34	FK28L-16	EJECT PREVENTION SPRING
35	FK28R-11	SLIDE SPRING
36	FR22H-11	FLYWHEEL ASS'Y
37	FR20L-21A	PINCH ROLLER
38	FG114-14	SCREW (2.6 x 5 mm)
39	UG15S-11A	SCREW (7.7 mm)
40	UG13U-15	E-STOP RING
41	UG12H-16	SCREW (3.0 x 8 mm)
42	FF17C-12	HOLDER CUSHION
43	F765-263	SOLENOID ASS'Y
44	FL39H-12A	SHAFT
45	FL39K-12	PLUNGER

EXPLODED VIEW

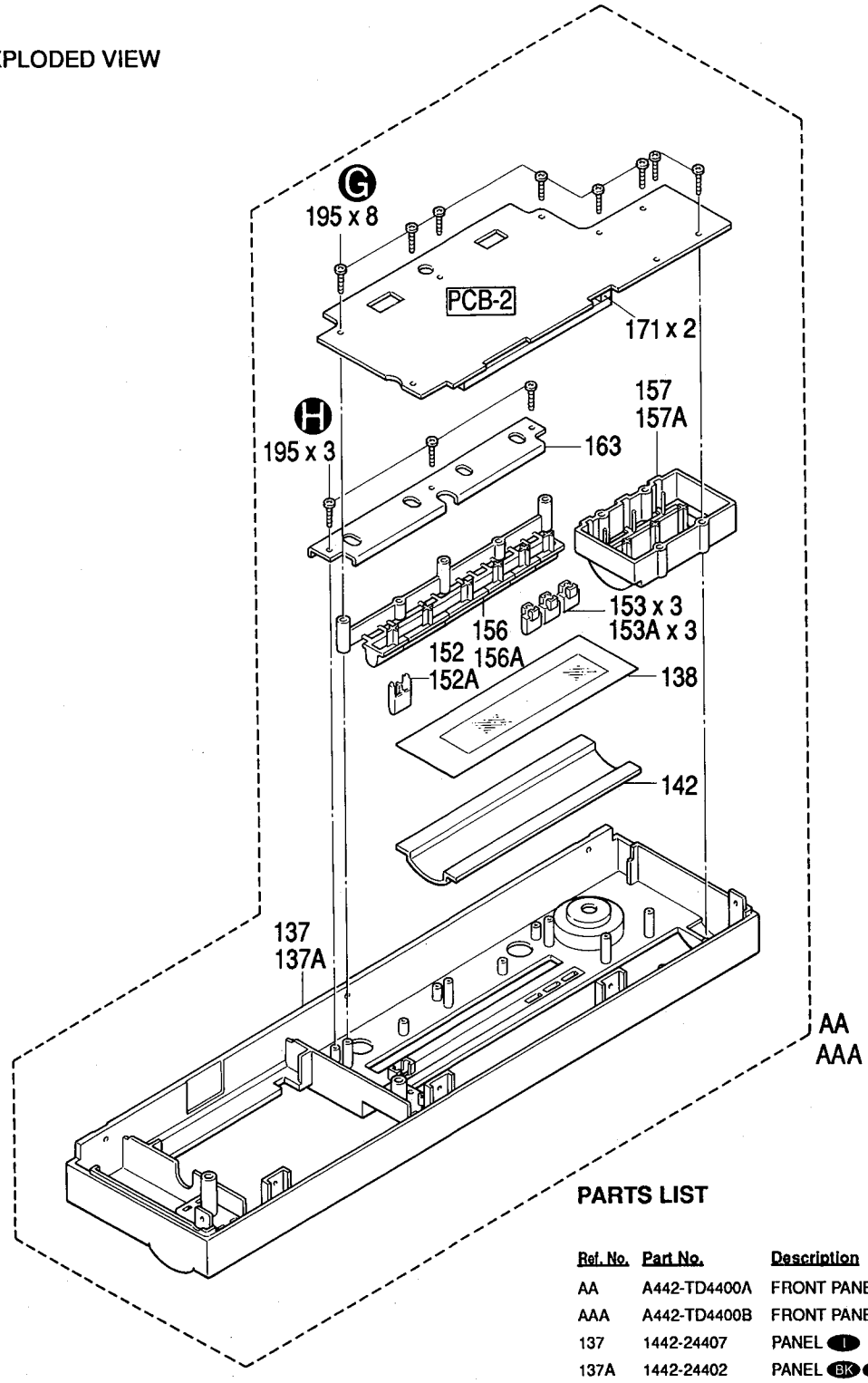

PARTS LIST

Ref. No.	Part No.	Description
AA	A442-TD4400A	FRONT PANEL ASS'Y (I)
AAA	A442-TD4400B	FRONT PANEL ASS'Y (BK) (IB) (BB)
137	1442-24407	PANEL (I)
137A	1442-24402	PANEL (BK) (IB) (BB)
138	1511-19806	PLATE
142	1532-17504	WINDOW
152	1662-36303	PUSH BUTTON (I)
152A	1662-36301	PUSH BUTTON (BK) (IB) (BB)
153	1662-52303	PUSH BUTTON (I)
153A	1662-52301	PUSH BUTTON (BK) (IB) (BB)
156	1662-58502	PUSH BUTTON (I)
156A	1662-58501	PUSH BUTTON (BK) (IB) (BB)
157	1662-51904	PUSH BUTTON (I)
157A	1662-51903	PUSH BUTTON (BK) (IB) (BB)
163	2219-8284	METAL FITTING
171	2240-7370	HOLDER
195	2347-R0126082	SCREW (2.6 x 8mm)

CASSETTE TAPE RECORDER MECHANISM

EXPLODED VIEW

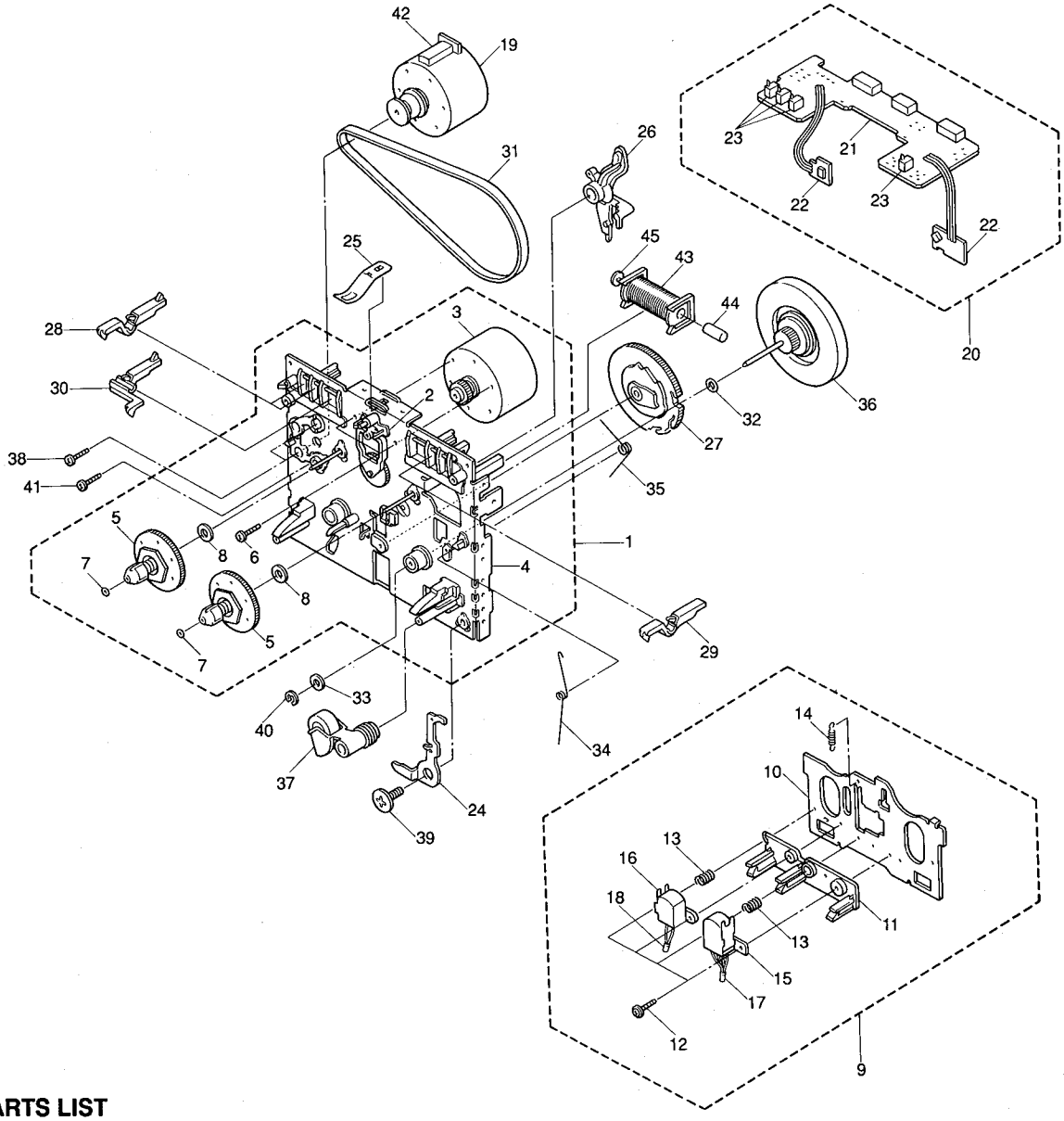

PARTS LIST

Ref. No.	Part No.	Description
1	F511-486	CHASSIS ASS'Y
2	F517-049	IDLER ASS'Y
3	F564-280	REEL MOTOR ASS'Y
4	F612-169	CHASSIS BASE ASS'Y
5	F623-037	REEL BASE ASS'Y
6	FG156-11A	SCREW (2.6 x 6.4 mm)
7	FJ111-17	NON-METAL WASHER (1.7 x 0.25 mm)
8	UJ12V-11	NON-METAL WASHER (2.1 x 0.25 mm)
9	F513-593	PLATE HEAD ASS'Y
10	FC52E-44	HEAD BASE
11	FD45T-15	HEAD SPACER
12	FG137-18	SCREW (2.0 x 9 mm)
13	FK21U-11	SPRING, AZIMUTH
14	FK26N-14	HEAD BASE SPRING
15	FU18K-13	REC/PB HEAD
16	FU192-11	ERASE HEAD
17	WH50S-06	WIRE CONNECTOR
18	WH42S-00	WIRE CONNECTOR
19	F525-269	CAPSTAN MOTOR
20	F567-362	RELAY P.C. BOARD ASS'Y
21	F743-103	RELAY P.C. BOARD
22	AZ15S-00	LEAF SWITCH
23	UE16E-11	PUSH SWITCH
24	FC39M-68	EJECT PREVENTION ARM
25	FC52H-12	SPRING, CASSETTE
26	FD45G-12	PLAY ARM ASS'Y
27	FD45B-14	CAM GEAR
28	FD44T-14	SWITCH ARM, REC
29	FD44Y-12	SWITCH ARM, PACK
30	FD44V-12	SWITCH ARM, METAL
31	FF17W-21	MAIN BELT
32	FJ111-30	NON-METAL WASHER (2.6 x 0.25 mm)
33	FJ111-14	NON-METAL WASHER (2.6 x 0.5 mm)
34	FK28L-16	EJECT PREVENTION SPRING
35	FK28R-11	SLIDE SPRING
36	FR22H-11	FLYWHEEL ASS'Y
37	FR20L-21A	PINCH ROLLER
38	FG114-14	SCREW (2.6 x 5 mm)
39	UG15S-11A	SCREW (7.7 mm)
40	UG13U-15	E-STOP RING
41	UG12H-16	SCREW (3.0 x 8 mm)
42	FF17C-12	HOLDER CUSHION
43	F765-263	SOLENOID ASS'Y
44	FL39H-12A	SHAFT
45	FL39K-12	PLUNGER

WIRING DIAGRAM

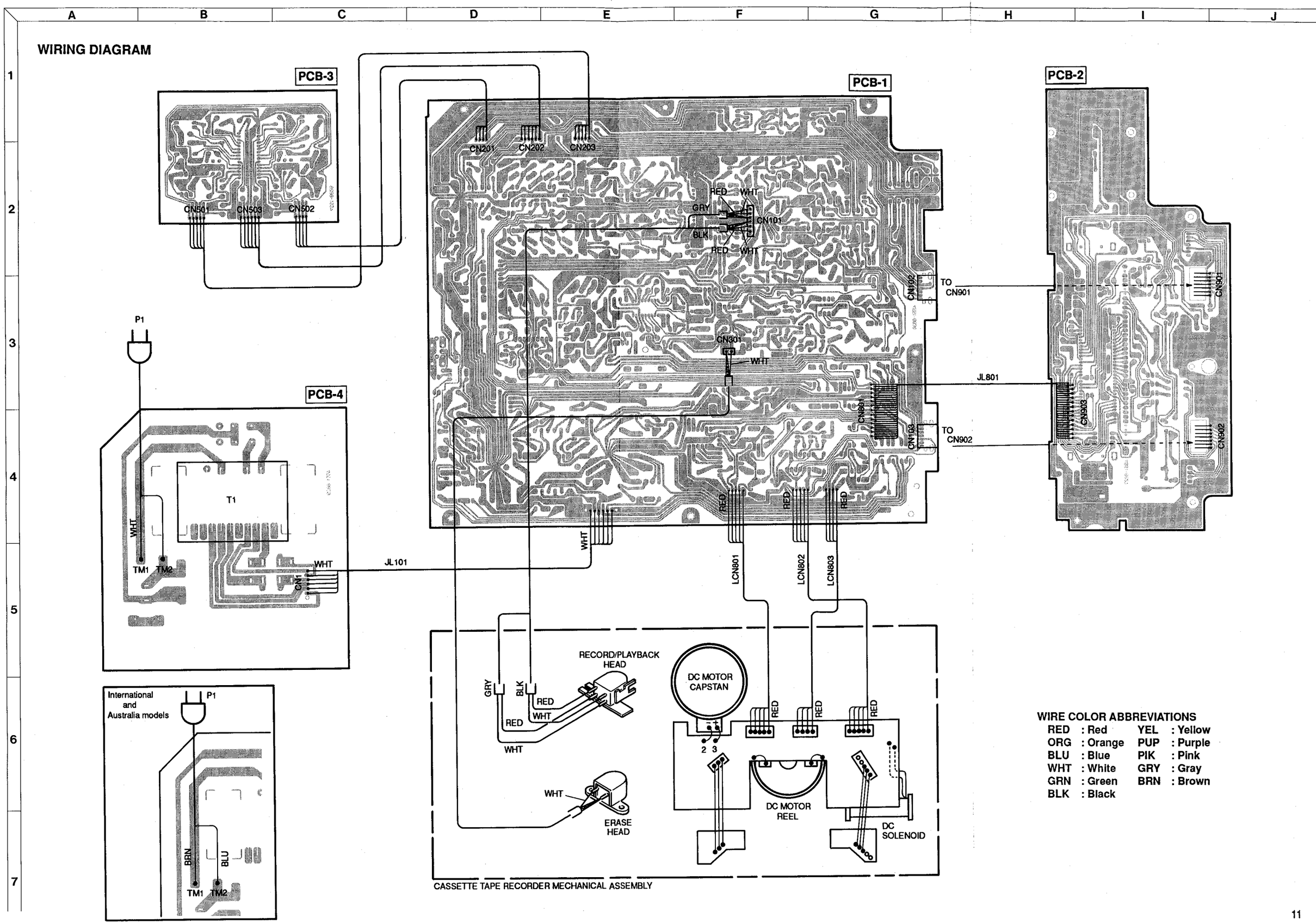

WIRE COLOR ABBREVIATIONS

RED	: Red	YEL	: Yellow
ORG	: Orange	PUP	: Purple
BLU	: Blue	PIK	: Pink
WHT	: White	GRY	: Gray
GRN	: Green	BRN	: Brown
BLK	: Black		

WIRING DIAGRAM

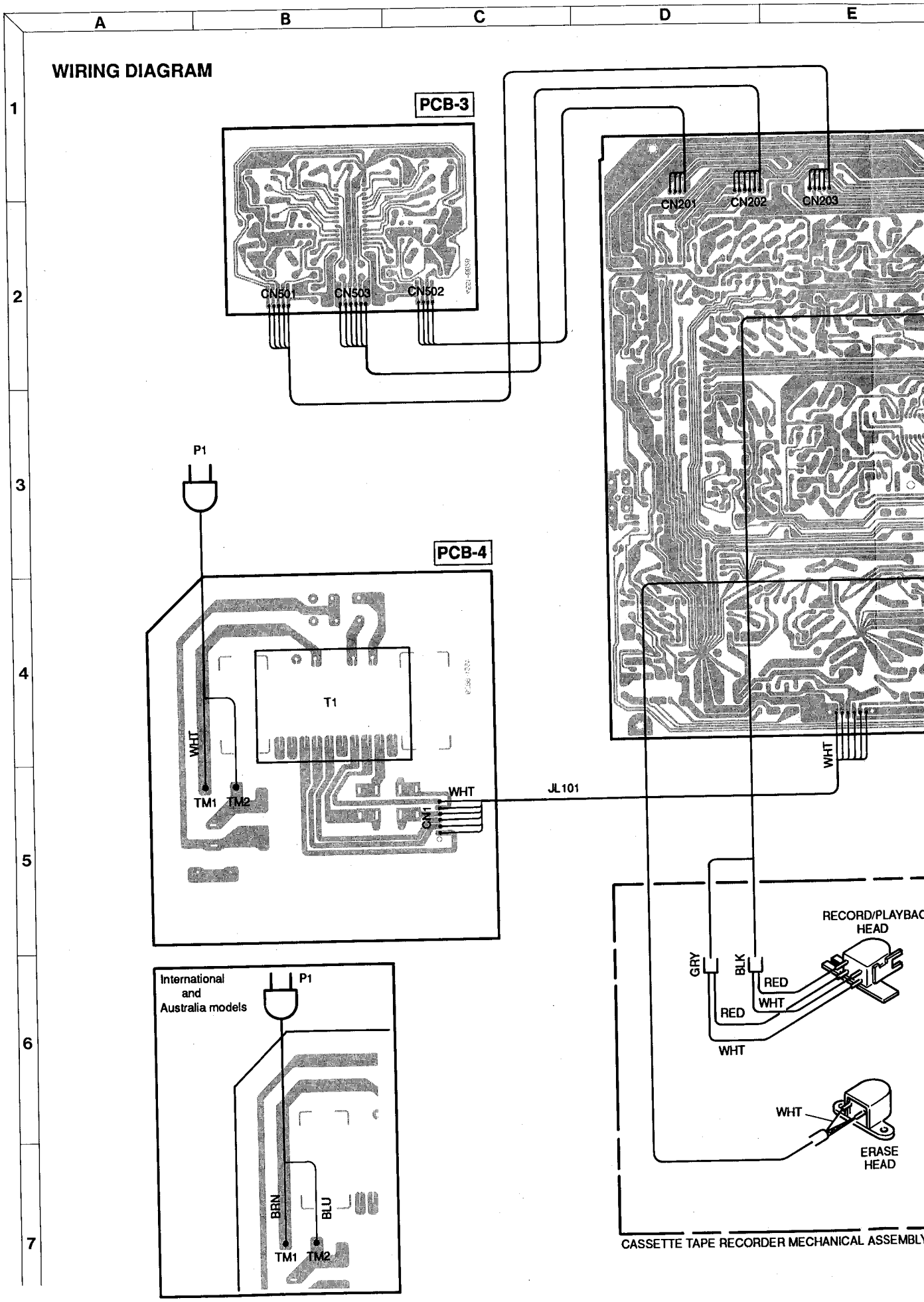

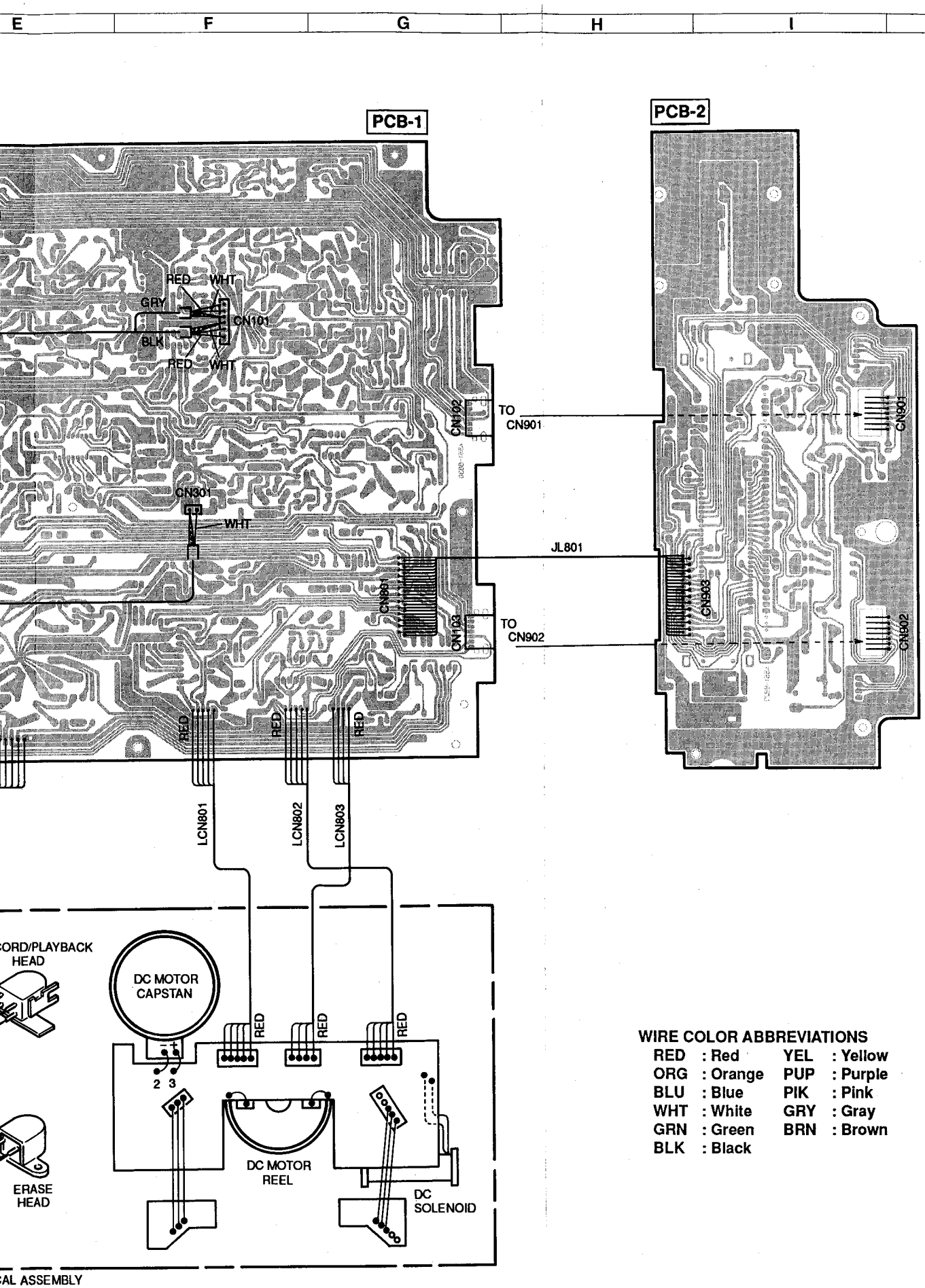

WIRE COLOR ABBREVIATIONS

RED	: Red	YEL	: Yellow
ORG	: Orange	PUP	: Purple
BLU	: Blue	PIK	: Pink
WHT	: White	GRY	: Gray
GRN	: Green	BRN	: Brown
BLK	: Black		

P. C. BOARDS (1)

PCB-1 Main P. C. Board

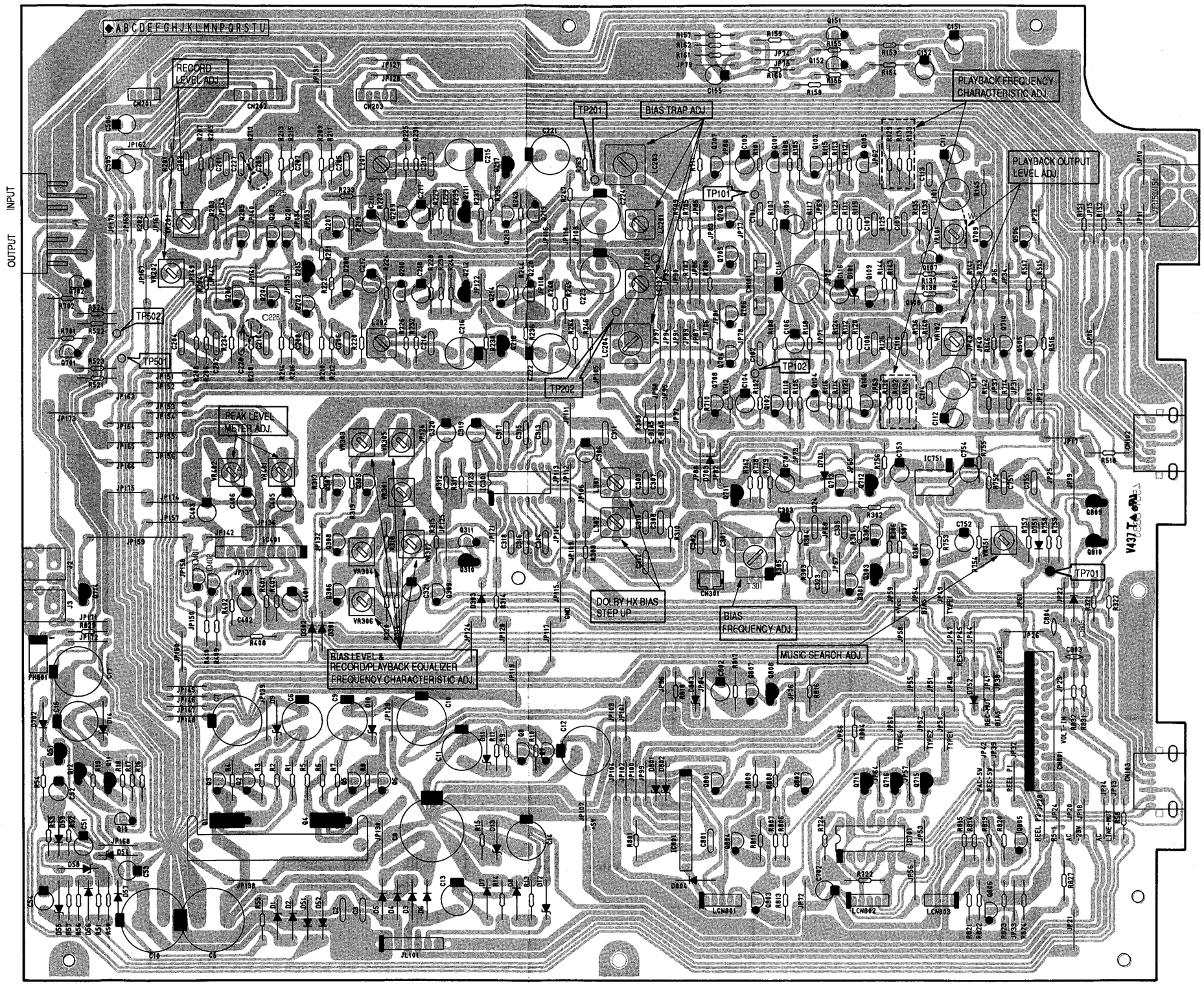

P. C. BOARDS (1)

PCB-1 Main P. C. Board

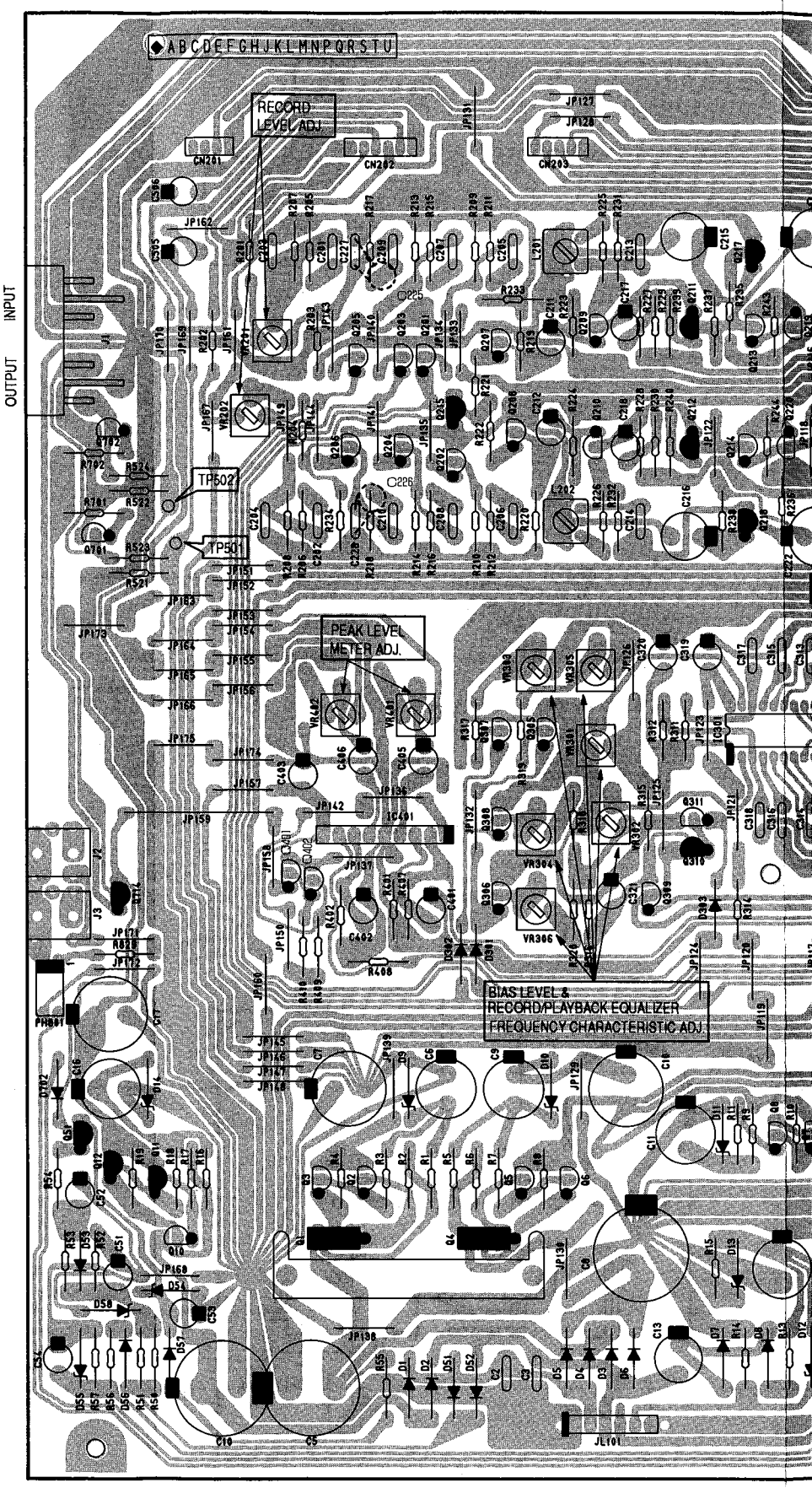

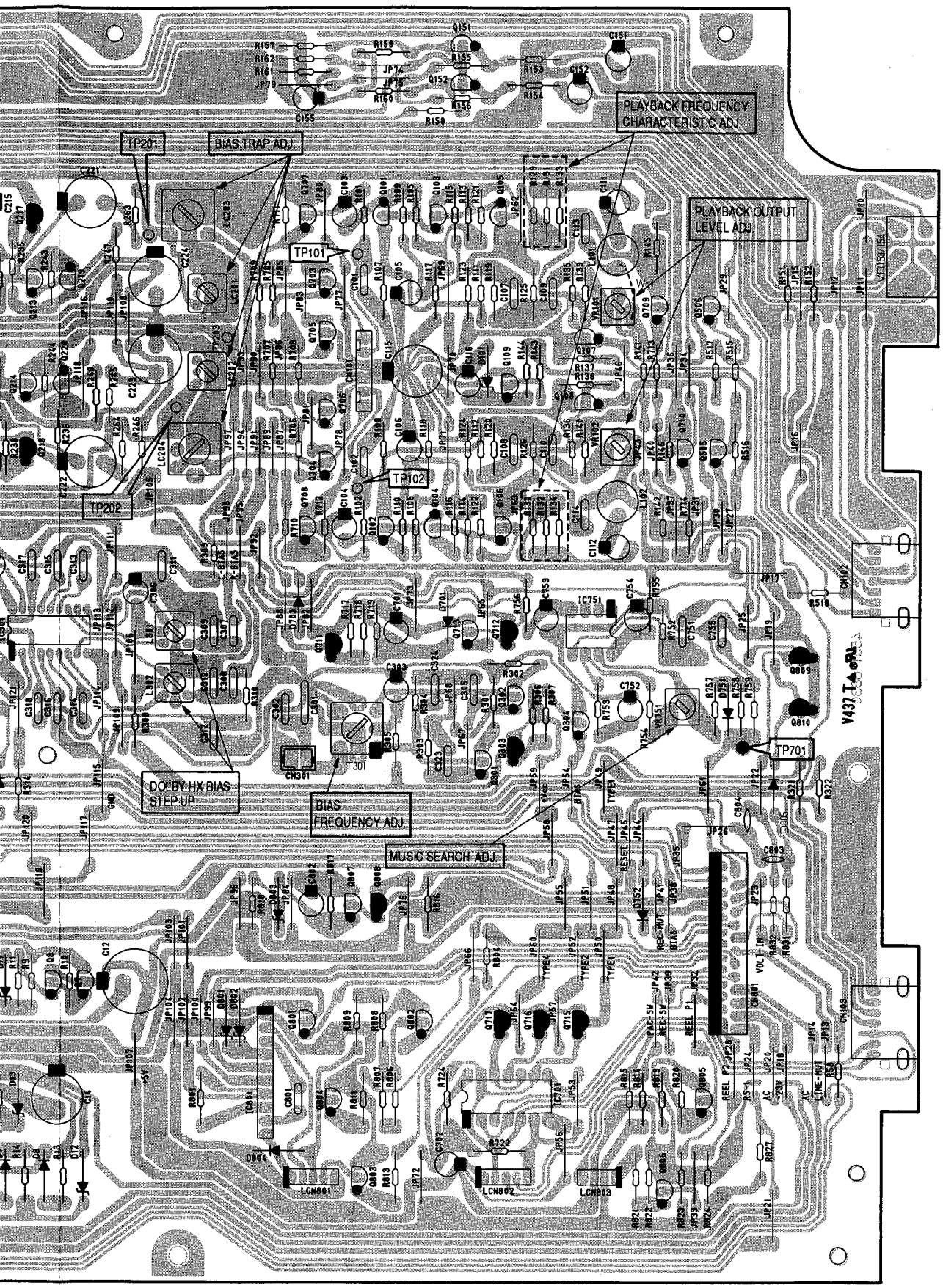
F
G
H
I
J
TP201
BIAS TRAP ADJ.
TP101
TP102
TP202
PLAYBACK FREQUENCY CHARACTERISTIC ADJ.
PLAYBACK OUTPUT LEVEL ADJ.
DOLBY HX BIAS STEP UP
BIAS FREQUENCY ADJ.
MUSIC SEARCH ADJ.
TP701
V437 T

P. C. BOARDS (2)

PCB-2 Front P. C. Board

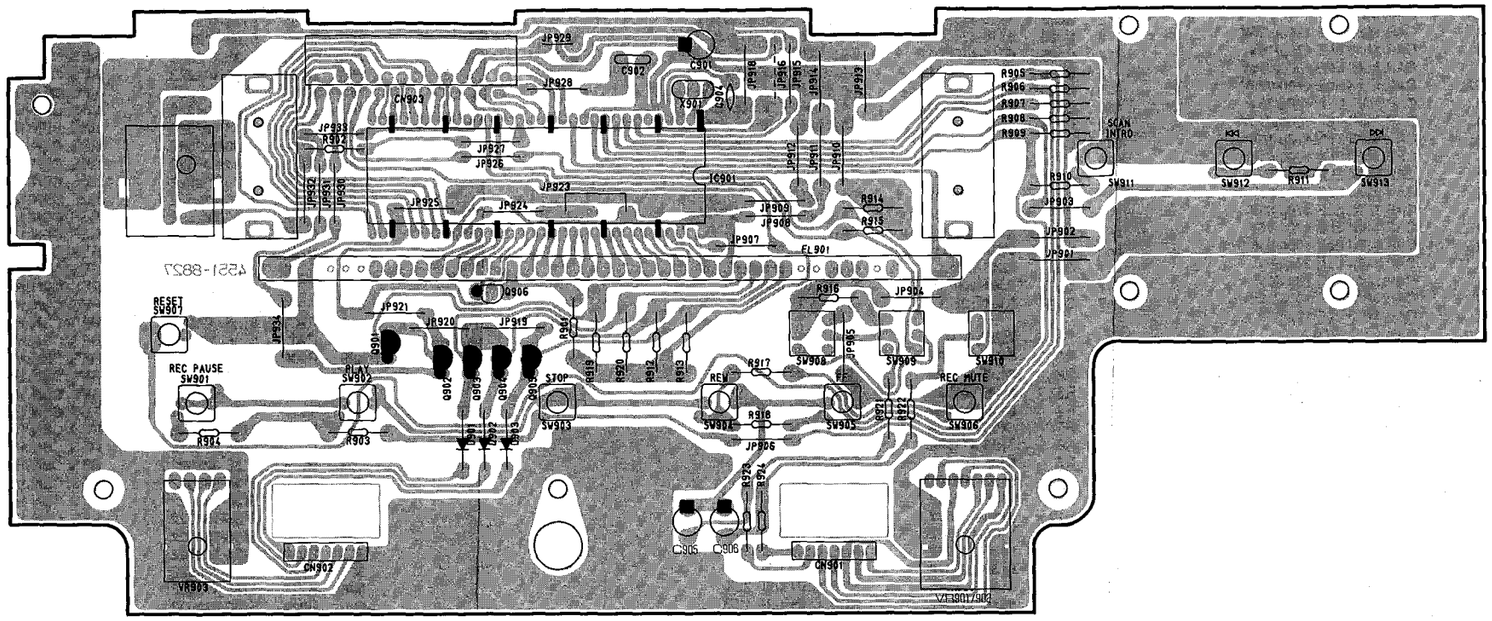

PCB-3 Dolby NR P. C. Board

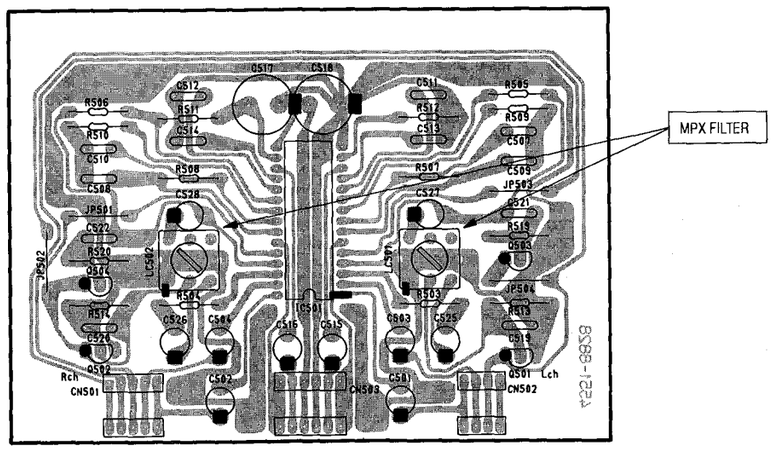

PCB-4 Power P. C. Board

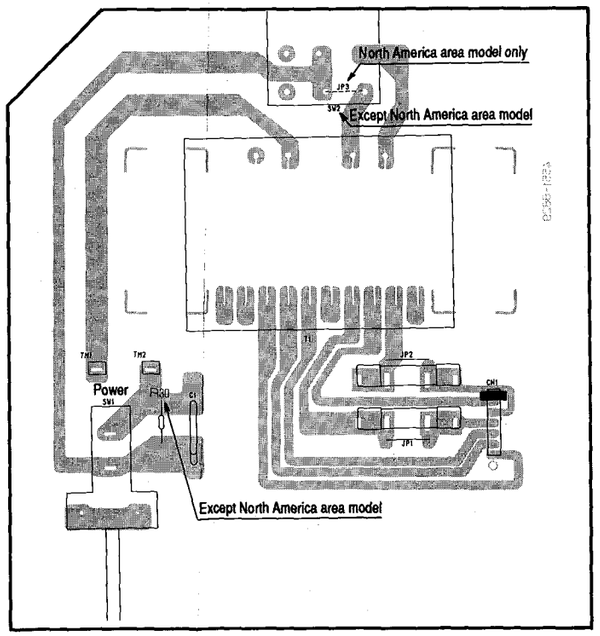

P. C. BOARDS (2)

PCB-2 Front P. C. Board

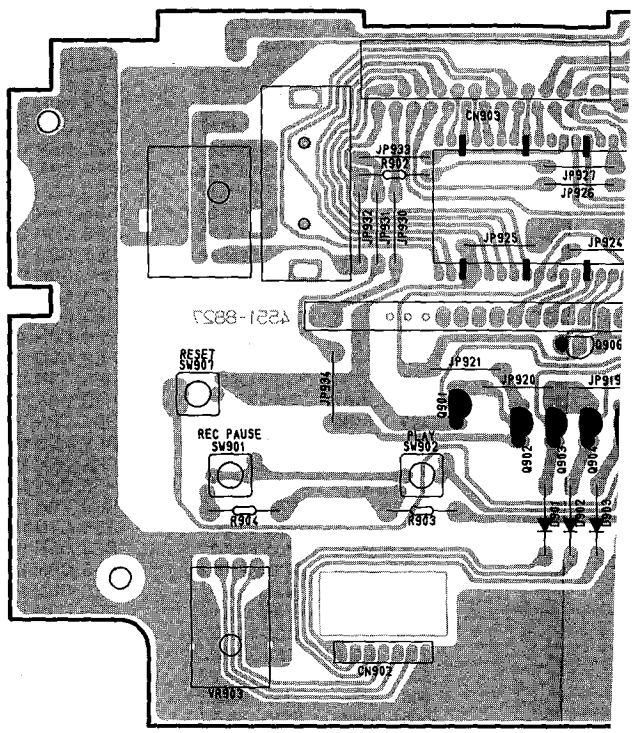

PCB-3 Dolby NR P. C. Board

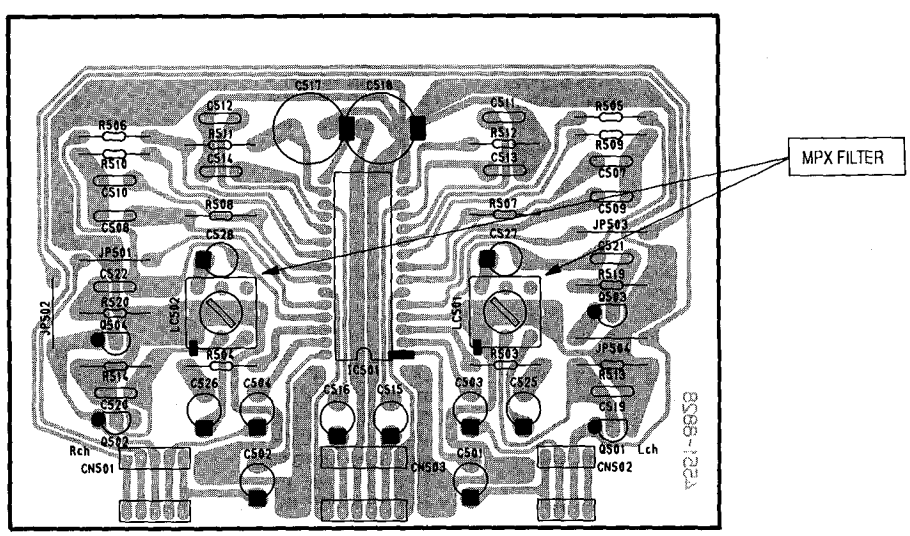

E	F	G	H	I	J

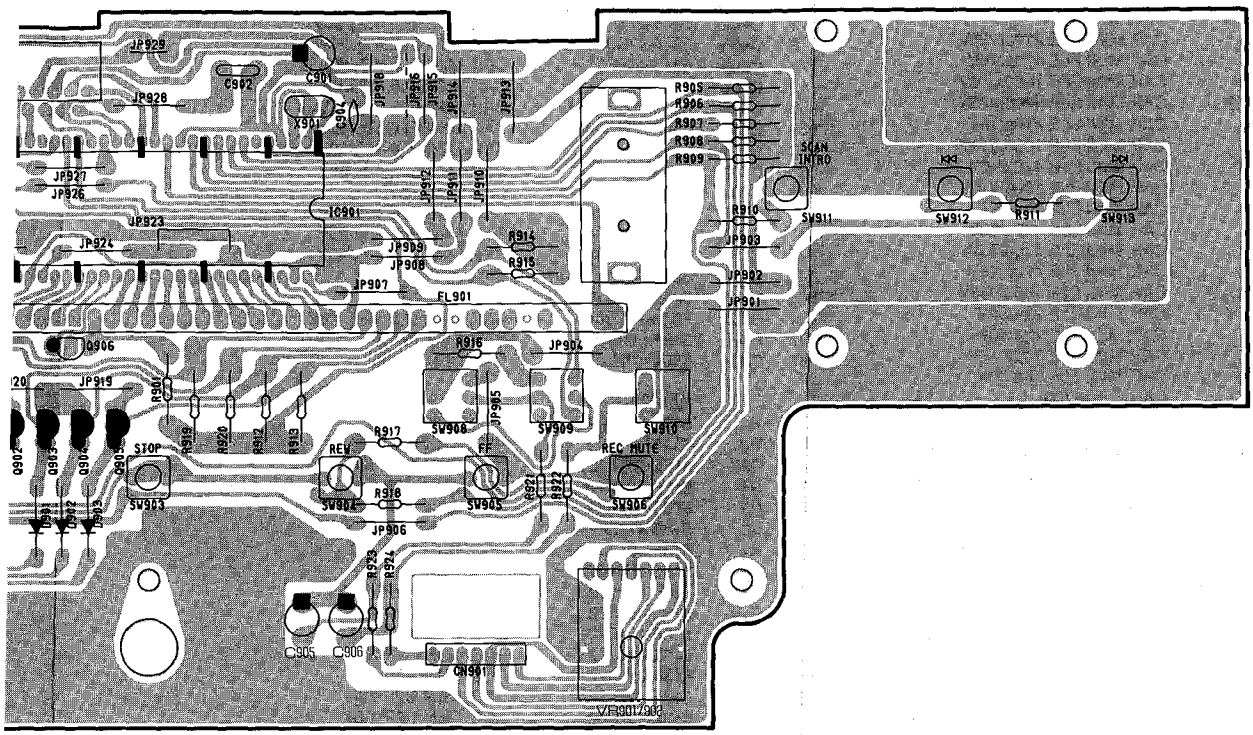

PCB-4 Power P. C. Board

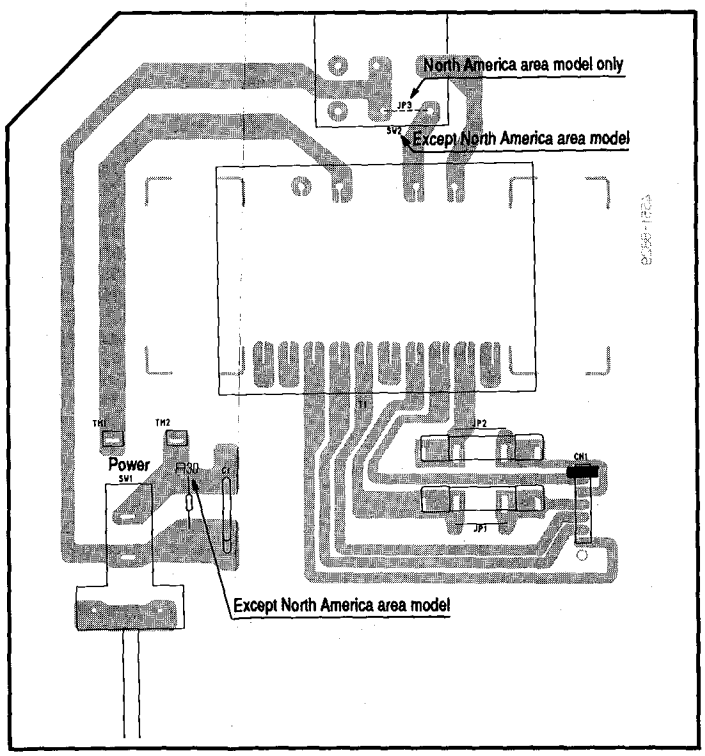

PX FILTER

ELECTRICAL PARTS LIST

PCB-1 MAIN P. C. BOARD

Ser. No.	Ref. No.	Part No.	Description
		CAPACITORS	
616	C2	5352-S060K104	CAP, MTL .1µ
616	C3	5352-S060K104	CAP, MTL .1µ
603	C5	5345-228D041	CAP, MINI ELE 2200µ/25V
604	C6	5345-477C041	CAP, MINI ELE 470µ/16V
605	C7	5345-108C041	CAP, MINI ELE 1000µ/16V
607	C8	5345-478D0962	CAP, MINI ELE 4700µ/25V
604	C9	5345-477C041	CAP, MINI ELE 470µ/16V
605	C10	5345-108C041	CAP, MINI ELE 1000µ/16V
604	C11	5345-477C041	CAP, MINI ELE 470µ/16V
606	C12	5345-108B041	CAP, MINI ELE 1000µ/10V
610	C13	5345-226E041	CAP, MINI ELE 22µ/35V
608	C14	5345-227E041	CAP, MINI ELE 220µ/35V
609	C15	5345-477E041	CAP, MINI ELE 470µ/35V
604	C16	5345-477C041	CAP, MINI ELE 470µ/16V
605	C17	5345-108C041	CAP, MINI ELE 1000µ/16V
684	C51	5345-226F041	CAP, MINI ELE 22µ/50V
684	C52	5345-226F041	CAP, MINI ELE 22µ/50V
685	C53	5345-107C041	CAP, MINI ELE 100µ/16V
686	C54	5345-106F041	CAP, MINI ELE 10µ/50V
427	C101	5359-S010J471	CAP, PPP 470p
427	C102	5359-S010J471	CAP, PPP 470p
416	C103	5345-226C0951	CAP, MINI ELE 22µ/16V
416	C104	5345-226C0951	CAP, MINI ELE 22µ/16V
419	C105	5345-227B041	CAP, MINI ELE 220µ/10V
419	C106	5345-227B041	CAP, MINI ELE 220µ/10V
424	C107	5359-S010J682	CAP, PPP 6800p
424	C108	5359-S010J682	CAP, PPP 6800p
424	C109	5359-S010J682	CAP, PPP 6800p
424	C110	5359-S010J682	CAP, PPP 6800p
415	C111	5345-106C0951	CAP, MINI ELE 10µ/16V
415	C112	5345-106C0951	CAP, MINI ELE 10µ/16V
423	C113	5359-S010J182	CAP, PPP 1800p
423	C114	5359-S010J182	CAP, PPP 1800p
420	C115	5345-477C041	CAP, MINI ELE 470µ/16V
417	C116	5345-336C041	CAP, MINI ELE 33µ/16V
753	C151	5345-106C0951	CAP, MINI ELE 10µ/16V
753	C152	5345-106C0951	CAP, MINI ELE 10µ/16V
754	C155	5345-107B041	CAP, MINI ELE 100µ/10V
485	C201	5359-S010J152	CAP, PPP 1500p
485	C202	5359-S010J152	CAP, PPP 1500p
484	C203	5359-S010J122	CAP, PPP 1200p
484	C204	5359-S010J122	CAP, PPP 1200p
486	C205	5359-S010J822	CAP, PPP 8200p
486	C206	5359-S010J822	CAP, PPP 8200p
487	C207	5359-S010J821	CAP, PPP 820p
487	C208	5359-S010J821	CAP, PPP 820p
488	C209	5359-S010J471	CAP, PPP 470p
488	C210	5359-S010J471	CAP, PPP 470p
476	C211	5345-105F0951	CAP, MINI ELE 1µ/50V
476	C212	5345-105F0951	CAP, MINI ELE 1µ/50V
491	C213	5359-S010J123	CAP, PPP .012µ
491	C214	5359-S010J123	CAP, PPP .012µ
477	C215	5345-476C0951	CAP, MINI ELE 47µ/16V
477	C216	5345-476C0951	CAP, MINI ELE 47µ/16V
478	C217	5345-106C0951	CAP, MINI ELE 10µ/16V
478	C218	5345-106C0951	CAP, MINI ELE 10µ/16V
480	C221	5345-227A0951	CAP, MINI ELE 220µ/6.3V
480	C222	5345-227A0951	CAP, MINI ELE 220µ/6.3V
481	C223	5345-227C041	CAP, MINI ELE 220µ/16V
481	C224	5345-227C041	CAP, MINI ELE 220µ/16V
492	C225	5359-S010J122	CAP, PPP 1200p
492	C226	5359-S010J122	CAP, PPP 1200p
493	C227	5359-S010J561	CAP, PPP 560p
493	C228	5359-S010J561	CAP, PPP 560p
547	C301	5354-S040K103	CAP, MYL .01µ
556	C302	5361-100J434	CAP, CER 10p
542	C303	5345-106F041	CAP, MINI ELE 10µ/50V
551	C305	5359-S010J103	CAP, PPP .01µ
543	C306	5345-105F041	CAP, MINI ELE 1µ/50V
557	C307	5361-1010423	CAP, CER 100p
557	C308	5361-1010423	CAP, CER 100p
558	C309	5361-4710423	CAP, CER 470p
558	C310	5361-4710423	CAP, CER 470p
559	C311	5361-561KB	CAP, CER 560p
559	C312	5361-561KB	CAP, CER 560p
548	C313	5354-104593	CAP, MYL .1µ
548	C314	5354-104593	CAP, MYL .1µ
552	C315	5359-S010J223	CAP, PPP .022µ
552	C316	5359-S010J223	CAP, PPP .022µ
553	C317	5359-S010J103	CAP, PPP .01µ
553	C318	5359-S010J103	CAP, PPP .01µ
542	C319	5345-106F041	CAP, MINI ELE 10µ/50V
542	C320	5345-106F041	CAP, MINI ELE 10µ/50V
542	C321	5345-106F041	CAP, MINI ELE 10µ/50V
554	C323	5359-S010J562	CAP, PPP 5600p
554	C324	5359-S010J562	CAP, PPP 5600p
712	C401	5345-475F041	CAP, MINI ELE 4.7µ/50V
712	C402	5345-475F041	CAP, MINI ELE 4.7µ/50V
713	C403	5345-476D041	CAP, MINI ELE 47µ/25V
712	C405	5345-475F041	CAP, MINI ELE 4.7µ/50V
712	C406	5345-475F041	CAP, MINI ELE 4.7µ/50V
650	C505	5345-106C0951	CAP, MINI ELE 10µ/16V
650	C506	5345-106C0951	CAP, MINI ELE 10µ/16V
683	C701	5345-106F041	CAP, MINI ELE 10µ/50V
683	C702	5345-106F041	CAP, MINI ELE 10µ/50V
893	C751	5354-473J1HM	CAP, MYL .047µ
891	C752	5345-476D041	CAP, MINI ELE 47µ/25V
891	C753	5345-476D041	CAP, MINI ELE 47µ/25V
891	C754	5345-476D041	CAP, MINI ELE 47µ/25V
894	C755	5359-S010J822	CAP, PPP 8200p
866	C801	5359-S010J103	CAP, PPP .01µ
864	C802	5345-107B041	CAP, MINI ELE 100µ/10V
867	C803	5361-102KB	CAP, CER 1000p
867	C804	5361-102KB	CAP, CER 1000p
		RESISTORS	
619	R1	5135-152522	RES, CBN 1/2P 1.5K
620	R2	5135-471522	RES, CBN 1/2P 470
621	R3	5135-101522	RES, CBN 1/2P 100
622	R4	5135-3R9522	RES, CBN 1/2P 3.9
619	R5	5135-152522	RES, CBN 1/2P 1.5K
620	R6	5135-471522	RES, CBN 1/2P 470
621	R7	5135-101522	RES, CBN 1/2P 100
623	R8	5135-1R2522	RES, CBN 1/2P 1.2
619	R9	5135-152522	RES, CBN 1/2P 1.5K
620	R10	5135-471522	RES, CBN 1/2P 470
621	R11	5135-101522	RES, CBN 1/2P 100
636	R13	5135-221522	RES, CBN 1/2P 220
625	R14	5135-223522	RES, CBN 1/2P 22K
625	R15	5135-223522	RES, CBN 1/2P 22K
619	R16	5135-152522	RES, CBN 1/2P 1.5K
620	R17	5135-471522	RES, CBN 1/2P 470
621	R18	5135-101522	RES, CBN 1/2P 100
624	R19	5135-100522	RES, CBN 1/2P 10
626	R50	5135-331522	RES, CBN 1/2P 330
626	R51	5135-331522	RES, CBN 1/2P 330
691	R52	5135-222522	RES, CBN 1/2P 2.2K
696	R53	5135-105522	RES, CBN 1/2P 1M
693	R54	5135-104522	RES, CBN 1/2P 100K
698	R55	5135-182522	RES, CBN 1/2P 1.8K
699	R56	5135-102522	RES, CBN 1/2P 1K
699	R57	5135-102522	RES, CBN 1/2P 1K
687	R58	5135-103522	RES, CBN 1/2P 10K
437	R101	5135-101522	RES, CBN 1/2P 100
437	R102	5135-101522	RES, CBN 1/2P 100
448	R105	5174-S010F223	RES, MTL 1/4 22K
448	R106	5174-S010F223	RES, MTL 1/4 22K
441	R107	5174-S010F181	RES, MTL 1/4 180
441	R108	5174-S010F181	RES, MTL 1/4 180
450	R109	5135-224522	RES, CBN 1/2P 220K
450	R110	5135-224522	RES, CBN 1/2P 220K
446	R111	5135-332522	RES, CBN 1/2P 3.3K
446	R112	5135-332522	RES, CBN 1/2P 3.3K
444	R113	5135-562522	RES, CBN 1/2P 5.6K
444	R114	5135-562522	RES, CBN 1/2P 5.6K
435	R115	5135-470522	RES, CBN 1/2P 47
435	R116	5135-470522	RES, CBN 1/2P 47
439	R117	5135-681522	RES, CBN 1/2P 680
439	R118	5135-681522	RES, CBN 1/2P 680
451	R119	5135-684522	RES, CBN 1/2P 680K
451	R120	5135-684522	RES, CBN 1/2P 680K
438	R121	5135-331522	RES, CBN 1/2P 330
438	R122	5135-331522	RES, CBN 1/2P 330
442	R123	5135-102522	RES, CBN 1/2P 1K
442	R124	5135-102522	RES, CBN 1/2P 1K
452	R125	5135-822522	RES, CBN 1/2P 8.2K
452	R126	5135-822522	RES, CBN 1/2P 8.2K
436	R129	5135-472522	RES, CBN 1/2P 4.7K
436	R130	5135-472522	RES, CBN 1/2P 4.7K
434	R131	5135-332522	RES, CBN 1/2P 3.3K
434	R132	5135-332522	RES, CBN 1/2P 3.3K
446	R133	5135-332522	RES, CBN 1/2P 3.3K
446	R134	5135-332522	RES, CBN 1/2P 3.3K
443	R135	5135-392522	RES, CBN 1/2P 3.9K
443	R136	5135-392522	RES, CBN 1/2P 3.9K
453	R137	5135-105522	RES, CBN 1/2P 1M
453	R138	5135-105522	RES, CBN 1/2P 1M
447	R139	5135-103522	RES, CBN 1/2P 10K
447	R140	5135-103522	RES, CBN 1/2P 10K
449	R141	5135-104522	RES, CBN 1/2P 100K
449	R142	5135-104522	RES, CBN 1/2P 100K
431	R143	5135-4R7522	RES, CBN 1/2P 4.7
442	R144	5135-102522	RES, CBN 1/2P 1K
750	R151	5135-102522	RES, CBN 1/2P 1K
750	R152	5135-102522	RES, CBN 1/2P 1K
750	R153	5135-102522	RES, CBN 1/2P 1K
750	R154	5135-102522	RES, CBN 1/2P 1K
751	R155	5135-104522	RES, CBN 1/2P 100K
751	R156	5135-104522	RES, CBN 1/2P 100K
750	R157	5135-102522	RES, CBN 1/2P 1K
750	R158	5135-102522	RES, CBN 1/2P 1K
750	R159	5135-102522	RES, CBN 1/2P 1K
750	R160	5135-102522	RES, CBN 1/2P 1K
752	R161	5135-472522	RES, CBN 1/2P 4.7K
749	R162	5135-562522	RES, CBN 1/2P 5.6K
496	R201	5135-152522	RES, CBN 1/2P 1.5K
496	R202	5135-152522	RES, CBN 1/2P 1.5K
497	R203	5135-222522	RES, CBN 1/2P 2.2K
497	R204	5135-222522	RES, CBN 1/2P 2.2K
498	R205	5135-104522	RES, CBN 1/2P 100K
498	R206	5135-104522	RES, CBN 1/2P 100K
499	R207	5135-223522	RES, CBN 1/2P 22K
499	R208	5135-223522	RES, CBN 1/2P 22K
500	R209	5135-183522	RES, CBN 1/2P 18K
500	R210	5135-183522	RES, CBN 1/2P 18K
501	R211	5135-103522	RES, CBN 1/2P 10K
501	R212	5135-103522	RES, CBN 1/2P 10K
518	R213	5135-823522	RES, CBN 1/2P 82K
518	R214	5135-823522	RES, CBN 1/2P 82K
519	R215	5135-563522	RES, CBN 1/2P 56K
519	R216	5135-563522	RES, CBN 1/2P 56K
508	R217	5135-154522	RES, CBN 1/2P 150K
508	R218	5135-154522	RES, CBN 1/2P 150K
505	R219	5135-222522	RES, CBN 1/2P 2.2K
505	R220	5135-222522	RES, CBN 1/2P 2.2K
506	R221	5135-472522	RES, CBN 1/2P 4.7K
506	R222	5135-472522	RES, CBN 1/2P 4.7K
507	R223	5135-104522	RES, CBN 1/2P 100K
507	R224	5135-104522	RES, CBN 1/2P 100K
515	R225	5135-151522	RES, CBN 1/2P 150
515	R226	5135-151522	RES, CBN 1/2P 150
510	R227	5135-122522	RES, CBN 1/2P 1.2K
510	R228	5135-122522	RES, CBN 1/2P 1.2K
511	R229	5135-221522	RES, CBN 1/2P 220
511	R230	5135-221522	RES, CBN 1/2P 220
509	R231	5135-821522	RES, CBN 1/2P 820
509	R232	5135-821522	RES, CBN 1/2P 820
499	R233	5135-223522	RES, CBN 1/2P 22K
499	R234	5135-223522	RES, CBN 1/2P 22K
510	R235	5135-122522	RES, CBN 1/2P 1.2K
510	R236	5135-122522	RES, CBN 1/2P 1.2K
512	R237	5135-104522	RES, CBN 1/2P 100K
512	R238	5135-104522	RES, CBN 1/2P 100K
515	R239	5135-151522	RES, CBN 1/2P 150
515	R240	5135-151522	RES, CBN 1/2P 150
514	R243	5135-910522	RES, CBN 1/2P 91
514	R244	5135-910522	RES, CBN 1/2P 91
513	R245	5135-101522	RES, CBN 1/2P 100
513	R246	5135-101522	RES, CBN 1/2P 100
517	R247	5135-473522	RES, CBN 1/2P 47K
517	R248	5135-473522	RES, CBN 1/2P 47K
516	R263	5135-331522	RES, CBN 1/2P 330
516	R264	5135-331522	RES, CBN 1/2P 330
562	R301	5135-220522	RES, CBN 1/2P 22
562	R302	5135-220522	RES, CBN 1/2P 22
568	R303	5135-333522	RES, CBN 1/2P 33K
568	R304	5135-333522	RES, CBN 1/2P 33K
539	R305	5135-4R7522	RES, CBN 1/2P 4.7
565	R306	5135-103522	RES, CBN 1/2P 10K
565	R307	5135-103522	RES, CBN 1/2P 10K
538	R308	5135-100522	RES, CBN 1/2P 10
567	R309	5135-154522	RES, CBN 1/2P 150K
567	R310	5135-154522	RES, CBN 1/2P 150K
568	R311	5135-333522	RES, CBN 1/2P 33K
568	R312	5135-333522	RES, CBN 1/2P 33K
538	R314	5135-100522	RES, CBN 1/2P 10
571	R315	5135-102522	RES, CBN 1/2P 1K
571	R316	5135-102522	RES, CBN 1/2P 1K
572	R317	5135-561522	RES, CBN 1/2P 560
572	R318	5135-561522	RES, CBN 1/2P 560
573	R319	5135-221522	RES, CBN 1/2P 220
573	R320	5135-221522	RES, CBN 1/2P 220
566	R321	5135-822522	RES, CBN 1/2P 8.2K
564	R322	5135-101522	RES, CBN 1/2P 100
719	R401	5135-334522	RES, CBN 1/2P 330K
719	R402	5135-334522	RES, CBN 1/2P 330K
720	R407	5135-103522	RES, CBN 1/2P 10K
720	R408	5135-103522	RES, CBN 1/2P 10K
721	R409	5135-223522	RES, CBN 1/2P 22K
721	R410	5135-223522	RES, CBN 1/2P 22K
662	R515	5135-103522	RES, CBN 1/2P 10K
669	R516	5135-123522	RES, CBN 1/2P 12K
667	R517	5135-223522	RES, CBN 1/2P 22K
662	R518	5135-103522	RES, CBN 1/2P 10K
663	R521	5135-104522	RES, CBN 1/2P 100K
663	R522	5135-104522	RES, CBN 1/2P 100K
658	R523	5135-222522	RES, CBN 1/2P 2.2K
658	R524	5135-222522	RES, CBN 1/2P 2.2K
691	R701	5135-222522	RES, CBN 1/2P 2.2K
691	R702	5135-222522	RES, CBN 1/2P 2.2K
688	R705	5135-103522	RES, CBN 1/2P 10K
688	R706	5135-103522	RES, CBN 1/2P 10K
689	R707	5135-392522	RES, CBN 1/2P 3.9K
689	R708	5135-392522	RES, CBN 1/2P 3.9K
688	R709	5135-103522	RES, CBN 1/2P 10K
688	R710	5135-103522	RES, CBN 1/2P 10K
690	R711	5135-223522	RES, CBN 1/2P 22K
690	R712	5135-223522	RES, CBN 1/2P 22K
687	R713	5135-103522	RES, CBN 1/2P 10K
687	R714	5135-103522	RES, CBN 1/2P 10K
691	R717	5135-222522	RES, CBN 1/2P 2.2K
687	R718	5135-103522	RES, CBN 1/2P 10K
687	R719	5135-103522	RES, CBN 1/2P 10K
694	R722	5135-473522	RES, CBN 1/2P 47K
694	R724	5135-473522	RES, CBN 1/2P 47K
898	R752	5135-104522	RES, CBN 1/2P 100K
899	R753	5135-331522	RES, CBN 1/2P 330
900	R754	5135-104522	RES, CBN 1/2P 100K
904	R755	5135-103522	RES, CBN 1/2P 10K
901	R756	5135-331522	RES, CBN 1/2P 330
902	R757	5135-332522	RES, CBN 1/2P 3.3K
898	R758	5135-104522	RES, CBN 1/2P 100K
903	R759	5135-471522	RES, CBN 1/2P 470
871	⚠R801	5102-1004715	RES, FUSE 10
872	R804	5135-103522	RES, CBN 1/2P 10K
873	R806	5135-5R6522	RES, CBN 1/2P 5.6
873	R807	5135-5R6522	RES, CBN 1/2P 5.6
873	R808	5135-5R6522	RES, CBN 1/2P 5.6
873	R809	5135-5R6522	RES, CBN 1/2P 5.6
872	R811	5135-103522	RES, CBN 1/2P 10K
872	R813	5135-103522	RES, CBN 1/2P 10K
877	R814	5135-473522	RES, CBN 1/2P 47K
877	R815	5135-473522	RES, CBN 1/2P 47K
872	R816	5135-103522	RES, CBN 1/2P 10K
874	R817	5135-471522	RES, CBN 1/2P 470
875	R818	5135-102522	RES, CBN 1/2P 1K
878	R819	5135-222522	RES, CBN 1/2P 2.2K
876	R820	5135-223522	RES, CBN 1/2P 22K
878	R821	5135-222522	RES, CBN 1/2P 2.2K
876	R822	5135-223522	RES, CBN 1/2P 22K
877	R823	5135-473522	RES, CBN 1/2P 47K
877	R824	5135-473522	RES, CBN 1/2P 47K
880	R827	5135-472522	RES, CBN 1/2P 4.7K
879	R829	5135-561522	RES, CBN 1/2P 560
875	R831	5135-102522	RES, CBN 1/2P 1K
875	R832	5135-102522	RES, CBN 1/2P 1K
		INTEGRATED CIRCUITS	
521	IC301	5653-U1297CA	IC, LINEAR
702	IC401	5653-BA6138	IC, LINEAR
671	IC701	5654-TC4011BP	IC, DIGITAL
881	IC751	5652-NJM4558D	IC, MONO
851	IC801	5653-BA6229	IC, LINEAR
		TRANSISTORS	
581	⚠Q1	5612-1375	XISTOR, PNP A
586	Q2	5613-2320(F)	XISTOR, NPN R
586	Q3	5613-2320(F)	XISTOR, NPN R
581	Q4	5612-1375	XISTOR, PNP A
586	Q5	5613-2320(F)	XISTOR, NPN R
586	Q6	5613-2320(F)	XISTOR, NPN R
584	Q7	5611-966(Y)	XISTOR, PNP R
586	Q8	5613-2320(F)	XISTOR, NPN R
582	⚠Q10	5613-2236(Y)	XISTOR, NPN R
583	Q11	5611-999(F)	XISTOR, PNP R
583	Q12	5611-999(F)	XISTOR, PNP R
678	Q51	5611-999(F)	XISTOR, PNP R
401	Q101	5613-1775(F)	XISTOR, NPN R
401	Q102	5613-1775(F)	XISTOR, NPN R
401	Q103	5613-1775(F)	XISTOR, NPN R

ELECTRICAL PARTS LIST

PCB-1 MAIN P. C. BOARD

Ser. No.	Ref. No.	Part No.	Description
		CAPACITORS	
616	C2	5352-S060K104	CAP, MTL .1μ
616	C3	5352-S060K104	CAP, MTL .1μ
603	C5	5345-228D041	CAP, MINI ELE 2200μ/25V
604	C6	5345-477C041	CAP, MINI ELE 470μ/16V
605	C7	5345-108C041	CAP, MINI ELE 1000μ/16V
607	C8	5345-478D0962	CAP, MINI ELE 4700μ/25V
604	C9	5345-477C041	CAP, MINI ELE 470μ/16V
605	C10	5345-108C041	CAP, MINI ELE 1000μ/16V
604	C11	5345-477C041	CAP, MINI ELE 470μ/16V
606	C12	5345-108B041	CAP, MINI ELE 1000μ/10V
610	C13	5345-226E041	CAP, MINI ELE 22μ/35V
608	C14	5345-227E041	CAP, MINI ELE 220μ/35V
609	C15	5345-477E041	CAP, MINI ELE 470μ/35V
604	C16	5345-477C041	CAP, MINI ELE 470μ/16V
605	C17	5345-108C041	CAP, MINI ELE 1000μ/16V
684	C51	5345-226F041	CAP, MINI ELE 22μ/50V
684	C52	5345-226F041	CAP, MINI ELE 22μ/50V
685	C53	5345-107C041	CAP, MINI ELE 100μ/16V
686	C54	5345-106F041	CAP, MINI ELE 10μ/50V
427	C101	5359-S010J471	CAP, PPP 470p
427	C102	5359-S010J471	CAP, PPP 470p
416	C103	5345-226C0951	CAP, MINI ELE 22μ/16V
416	C104	5345-226C0951	CAP, MINI ELE 22μ/16V
419	C105	5345-227B041	CAP, MINI ELE 220μ/10V
419	C106	5345-227B041	CAP, MINI ELE 220μ/10V
424	C107	5359-S010J682	CAP, PPP 6800p
424	C108	5359-S010J682	CAP, PPP 6800p
424	C109	5359-S010J682	CAP, PPP 6800p
424	C110	5359-S010J682	CAP, PPP 6800p
415	C111	5345-106C0951	CAP, MINI ELE 10μ/16V
415	C112	5345-106C0951	CAP, MINI ELE 10μ/16V
423	C113	5359-S010J182	CAP, PPP 1800p
423	C114	5359-S010J182	CAP, PPP 1800p
420	C115	5345-477C041	CAP, MINI ELE 470μ/16V
417	C116	5345-336C041	CAP, MINI ELE 33μ/16V
753	C151	5345-106C0951	CAP, MINI ELE 10μ/16V
753	C152	5345-106C0951	CAP, MINI ELE 10μ/16V
754	C155	5345-107B041	CAP, MINI ELE 100μ/10V
485	C201	5359-S010J152	CAP, PPP 1500p
485	C202	5359-S010J152	CAP, PPP 1500p
484	C203	5359-S010J122	CAP, PPP 1200p
484	C204	5359-S010J122	CAP, PPP 1200p
486	C205	5359-S010J822	CAP, PPP 8200p
486	C206	5359-S010J822	CAP, PPP 8200p
487	C207	5359-S010J821	CAP, PPP 820p
487	C208	5359-S010J821	CAP, PPP 820p
488	C209	5359-S010J471	CAP, PPP 470p
488	C210	5359-S010J471	CAP, PPP 470p
476	C211	5345-105F0951	CAP, MINI ELE 1μ/50V
476	C212	5345-105F0951	CAP, MINI ELE 1μ/50V
491	C213	5359-S010J123	CAP, PPP .012μ
491	C214	5359-S010J123	CAP, PPP .012μ
477	C215	5345-476C0951	CAP, MINI ELE 47μ/16V
477	C216	5345-476C0951	CAP, MINI ELE 47μ/16V
478	C217	5345-106C0951	CAP, MINI ELE 10μ/16V
478	C218	5345-106C0951	CAP, MINI ELE 10μ/16V
480	C221	5345-227A0951	CAP, MINI ELE 220μ/6.3V
480	C222	5345-227A0951	CAP, MINI ELE 220μ/6.3V
481	C223	5345-227C041	CAP, MINI ELE 220μ/16V
481	C224	5345-227C041	CAP, MINI ELE 220μ/16V
492	C225	5359-S010J122	CAP, PPP 1200p
492	C226	5359-S010J122	CAP, PPP 1200p
493	C227	5359-S010J561	CAP, PPP 560p
493	C228	5359-S010J561	CAP, PPP 560p
547	C301	5354-S040K103	CAP, MYL .01μ
556	C302	5361-100J434	CAP, CER 10p
542	C303	5345-106F041	CAP, MINI ELE 10μ/50V
551	C305	5359-S010J103	CAP, PPP .01μ
543	C306	5345-105F041	CAP, MINI ELE 1μ/50V
557	C307	5361-1010423	CAP, CER 100p
557	C308	5361-1010423	CAP, CER 100p
558	C309	5361-4710423	CAP, CER 470p
558	C310	5361-4710423	CAP, CER 470p
559	C311	5361-561KB	CAP, CER 560p
559	C312	5361-561KB	CAP, CER 560p
548	C313	5354-104593	CAP, MYL .1μ
548	C314	5354-104593	CAP, MYL .1μ
552	C315	5359-S010J223	CAP, PPP .022μ
552	C316	5359-S010J223	CAP, PPP .022μ
553	C317	5359-S010J103	CAP, PPP .01μ
553	C318	5359-S010J103	CAP, PPP .01μ
542	C319	5345-106F041	CAP, MINI ELE 10μ/50V
542	C320	5345-106F041	CAP, MINI ELE 10μ/50V
542	C321	5345-106F041	CAP, MINI ELE 10μ/50V
554	C323	5359-S010J562	CAP, PPP 5600p
554	C324	5359-S010J562	CAP, PPP 5600p
712	C401	5345-475F041	CAP, MINI ELE 4.7μ/50V
712	C402	5345-475F041	CAP, MINI ELE 4.7μ/50V
713	C403	5345-476D041	CAP, MINI ELE 47μ/25V
712	C405	5345-475F041	CAP, MINI ELE 4.7μ/50V
712	C406	5345-475F041	CAP, MINI ELE 4.7μ/50V
650	C505	5345-106C0951	CAP, MINI ELE 10μ/16V
650	C506	5345-106C0951	CAP, MINI ELE 10μ/16V
683	C701	5345-106F041	CAP, MINI ELE 10μ/50V
683	C702	5345-106F041	CAP, MINI ELE 10μ/50V
893	C751	5354-473J1HM	CAP, MYL .047μ
891	C752	5345-476D041	CAP, MINI ELE 47μ/25V
891	C753	5345-476D041	CAP, MINI ELE 47μ/25V
891	C754	5345-476D041	CAP, MINI ELE 47μ/25V
894	C755	5359-S010J822	CAP, PPP 8200p
866	C801	5359-S010J103	CAP, PPP .01μ
864	C802	5345-107B041	CAP, MINI ELE 100μ/10V
867	C803	5361-102KB	CAP, CER 1000p
867	C804	5361-102KB	CAP, CER 1000p
		RESISTORS	
619	R1	5135-152522	RES, CBN 1/2P 1.5K
620	R2	5135-471522	RES, CBN 1/2P 470
621	R3	5135-101522	RES, CBN 1/2P 100
622	R4	5135-3R9522	RES, CBN 1/2P 3.9
619	R5	5135-152522	RES, CBN 1/2P 1.5K
620	R6	5135-471522	RES, CBN 1/2P 470
621	R7	5135-101522	RES, CBN 1/2P 100
623	R8	5135-1R2522	RES, CBN 1/2P 1.2
619	R9	5135-152522	RES, CBN 1/2P 1.5K
620	R10	5135-471522	RES, CBN 1/2P 470
621	R11	5135-101522	RES, CBN 1/2P 100
636	R13	5135-221522	RES, CBN 1/2P 220
625	R14	5135-223522	RES, CBN 1/2P 22K
625	R15	5135-223522	RES, CBN 1/2P 22K
619	R16	5135-152522	RES, CBN 1/2P 1.5K
620	R17	5135-471522	RES, CBN 1/2P 470
621	R18	5135-101522	RES, CBN 1/2P 100
624	R19	5135-100522	RES, CBN 1/2P 10
626	R50	5135-331522	RES, CBN 1/2P 330
626	R51	5135-331522	RES, CBN 1/2P 330
691	R52	5135-222522	RES, CBN 1/2P 2.2K
696	R53	5135-105522	RES, CBN 1/2P 1M
693	R54	5135-104522	RES, CBN 1/2P 100K
698	R55	5135-182522	RES, CBN 1/2P 1.8K
699	R56	5135-102522	RES, CBN 1/2P 1K
699	R57	5135-102522	RES, CBN 1/2P 1K
687	R58	5135-103522	RES, CBN 1/2P 10K
437	R101	5135-101522	RES, CBN 1/2P 100
437	R102	5135-101522	RES, CBN 1/2P 100
448	R105	5174-S010F223	RES, MTL 1/4 22K
448	R106	5174-S010F223	RES, MTL 1/4 22K
441	R107	5174-S010F181	RES, MTL 1/4 180
441	R108	5174-S010F181	RES, MTL 1/4 180
450	R109	5135-224522	RES, CBN 1/2P 220K
450	R110	5135-224522	RES, CBN 1/2P 220K
446	R111	5135-332522	RES, CBN 1/2P 3.3K
446	R112	5135-332522	RES, CBN 1/2P 3.3K
444	R113	5135-562522	RES, CBN 1/2P 5.6K
444	R114	5135-562522	RES, CBN 1/2P 5.6K
435	R115	5135-470522	RES, CBN 1/2P 47
435	R116	5135-470522	RES, CBN 1/2P 47
439	R117	5135-681522	RES, CBN 1/2P 680
439	R118	5135-681522	RES, CBN 1/2P 680
451	R119	5135-684522	RES, CBN 1/2P 680K
451	R120	5135-684522	RES, CBN 1/2P 680K
438	R121	5135-331522	RES, CBN 1/2P 330
438	R122	5135-331522	RES, CBN 1/2P 330
442	R123	5135-102522	RES, CBN 1/2P 1K
442	R124	5135-102522	RES, CBN 1/2P 1K
452	R125	5135-822522	RES, CBN 1/2P 8.2K
452	R126	5135-822522	RES, CBN 1/2P 8.2K
436	R129	5135-472522	RES, CBN 1/2P 4.7K
436	R130	5135-472522	RES, CBN 1/2P 4.7K
434	R131	5135-332522	RES, CBN 1/2P 3.3K
434	R132	5135-332522	RES, CBN 1/2P 3.3K
446	R133	5135-332522	RES, CBN 1/2P 3.3K
446	R134	5135-332522	RES, CBN 1/2P 3.3K
443	R135	5135-392522	RES, CBN 1/2P 3.9K
443	R136	5135-392522	RES, CBN 1/2P 3.9K
453	R137	5135-105522	RES, CBN 1/2P 1M
453	R138	5135-105522	RES, CBN 1/2P 1M
447	R139	5135-103522	RES, CBN 1/2P 10K

Ser. No.	Ref. No.	Part No.	Description
447	R140	5135-103522	RES, CBN 1/2P 10K
449	R141	5135-104522	RES, CBN 1/2P 100K
449	R142	5135-104522	RES, CBN 1/2P 100K
431	R143	5135-4R7522	RES, CBN 1/2P 4.7
442	R144	5135-102522	RES, CBN 1/2P 1K
750	R151	5135-102522	RES, CBN 1/2P 1K
750	R152	5135-102522	RES, CBN 1/2P 1K
750	R153	5135-102522	RES, CBN 1/2P 1K
750	R154	5135-102522	RES, CBN 1/2P 1K
751	R155	5135-104522	RES, CBN 1/2P 100K
751	R156	5135-104522	RES, CBN 1/2P 100K
750	R157	5135-102522	RES, CBN 1/2P 1K
750	R158	5135-102522	RES, CBN 1/2P 1K
750	R159	5135-102522	RES, CBN 1/2P 1K
750	R160	5135-102522	RES, CBN 1/2P 1K
752	R161	5135-472522	RES, CBN 1/2P 4.7K
749	R162	5135-562522	RES, CBN 1/2P 5.6K
496	R201	5135-152522	RES, CBN 1/2P 1.5K
496	R202	5135-152522	RES, CBN 1/2P 1.5K
497	R203	5135-222522	RES, CBN 1/2P 2.2K
497	R204	5135-222522	RES, CBN 1/2P 2.2K
498	R205	5135-104522	RES, CBN 1/2P 100K
498	R206	5135-104522	RES, CBN 1/2P 100K
499	R207	5135-223522	RES, CBN 1/2P 22K
499	R208	5135-223522	RES, CBN 1/2P 22K
500	R209	5135-183522	RES, CBN 1/2P 18K
500	R210	5135-183522	RES, CBN 1/2P 18K
501	R211	5135-103522	RES, CBN 1/2P 10K
501	R212	5135-103522	RES, CBN 1/2P 10K
518	R213	5135-823522	RES, CBN 1/2P 82K
518	R214	5135-823522	RES, CBN 1/2P 82K
519	R215	5135-563522	RES, CBN 1/2P 56K
519	R216	5135-563522	RES, CBN 1/2P 56K
508	R217	5135-154522	RES, CBN 1/2P 150K
508	R218	5135-154522	RES, CBN 1/2P 150K
505	R219	5135-222522	RES, CBN 1/2P 2.2K
505	R220	5135-222522	RES, CBN 1/2P 2.2K
506	R221	5135-472522	RES, CBN 1/2P 4.7K
506	R222	5135-472522	RES, CBN 1/2P 4.7K
507	R223	5135-104522	RES, CBN 1/2P 100K
507	R224	5135-104522	RES, CBN 1/2P 100K
515	R225	5135-151522	RES, CBN 1/2P 150
515	R226	5135-151522	RES, CBN 1/2P 150
510	R227	5135-122522	RES, CBN 1/2P 1.2K
510	R228	5135-122522	RES, CBN 1/2P 1.2K
511	R229	5135-221522	RES, CBN 1/2P 220
511	R230	5135-221522	RES, CBN 1/2P 220
509	R231	5135-821522	RES, CBN 1/2P 820
509	R232	5135-821522	RES, CBN 1/2P 820
499	R233	5135-223522	RES, CBN 1/2P 22K
499	R234	5135-223522	RES, CBN 1/2P 22K
510	R235	5135-122522	RES, CBN 1/2P 1.2K
510	R236	5135-122522	RES, CBN 1/2P 1.2K
512	R237	5135-104522	RES, CBN 1/2P 100K
512	R238	5135-104522	RES, CBN 1/2P 100K
515	R239	5135-151522	RES, CBN 1/2P 150
515	R240	5135-151522	RES, CBN 1/2P 150
514	R243	5135-910522	RES, CBN 1/2P 91
514	R244	5135-910522	RES, CBN 1/2P 91
513	R245	5135-101522	RES, CBN 1/2P 100
513	R246	5135-101522	RES, CBN 1/2P 100
517	R247	5135-473522	RES, CBN 1/2P 47K
517	R248	5135-473522	RES, CBN 1/2P 47K
516	R263	5135-331522	RES, CBN 1/2P 330
516	R264	5135-331522	RES, CBN 1/2P 330
562	R301	5135-220522	RES, CBN 1/2P 22
562	R302	5135-220522	RES, CBN 1/2P 22
568	R303	5135-333522	RES, CBN 1/2P 33K
568	R304	5135-333522	RES, CBN 1/2P 33K
539	R305	5135-4R7522	RES, CBN 1/2P 4.7
565	R306	5135-103522	RES, CBN 1/2P 10K
565	R307	5135-103522	RES, CBN 1/2P 10K
538	R308	5135-100522	RES, CBN 1/2P 10
567	R309	5135-154522	RES, CBN 1/2P 150K
567	R310	5135-154522	RES, CBN 1/2P 150K
568	R311	5135-333522	RES, CBN 1/2P 33K
568	R312	5135-333522	RES, CBN 1/2P 33K
538	R314	5135-100522	RES, CBN 1/2P 10
571	R315	5135-102522	RES, CBN 1/2P 1K
571	R316	5135-102522	RES, CBN 1/2P 1K
572	R317	5135-561522	RES, CBN 1/2P 560
572	R318	5135-561522	RES, CBN 1/2P 560
573	R319	5135-221522	RES, CBN 1/2P 220
573	R320	5135-221522	RES, CBN 1/2P 220
566	R321	5135-822522	RES, CBN 1/2P 8.2K
564	R322	5135-101522	RES, CBN 1/2P 100

Ser. No.	Ref. No.	Part No.	Description
719	R401	5135-334522	RES, CBN 1/2P 330K
719	R402	5135-334522	RES, CBN 1/2P 330K
720	R407	5135-103522	RES, CBN 1/2P 10K
720	R408	5135-103522	RES, CBN 1/2P 10K
721	R409	5135-223522	RES, CBN 1/2P 22K
721	R410	5135-223522	RES, CBN 1/2P 22K
662	R515	5135-103522	RES, CBN 1/2P 10K
669	R516	5135-123522	RES, CBN 1/2P 12K
667	R517	5135-223522	RES, CBN 1/2P 22K
662	R518	5135-103522	RES, CBN 1/2P 10K
663	R521	5135-104522	RES, CBN 1/2P 100K
663	R522	5135-104522	RES, CBN 1/2P 100K
658	R523	5135-222522	RES, CBN 1/2P 2.2K
658	R524	5135-222522	RES, CBN 1/2P 2.2K
691	R701	5135-222522	RES, CBN 1/2P 2.2K
691	R702	5135-222522	RES, CBN 1/2P 2.2K
688	R705	5135-103522	RES, CBN 1/2P 10K
688	R706	5135-103522	RES, CBN 1/2P 10K
689	R707	5135-392522	RES, CBN 1/2P 3.9K
689	R708	5135-392522	RES, CBN 1/2P 3.9K
688	R709	5135-103522	RES, CBN 1/2P 10K
688	R710	5135-103522	RES, CBN 1/2P 10K
690	R711	5135-223522	RES, CBN 1/2P 22K
690	R712	5135-223522	RES, CBN 1/2P 22K
687	R713	5135-103522	RES, CBN 1/2P 10K
687	R714	5135-103522	RES, CBN 1/2P 10K
691	R717	5135-222522	RES, CBN 1/2P 2.2K
687	R718	5135-103522	RES, CBN 1/2P 10K
687	R719	5135-103522	RES, CBN 1/2P 10K
694	R722	5135-473522	RES, CBN 1/2P 47K
694	R724	5135-473522	RES, CBN 1/2P 47K
898	R752	5135-104522	RES, CBN 1/2P 100K
899	R753	5135-331522	RES, CBN 1/2P 330
900	R754	5135-104522	RES, CBN 1/2P 100K
904	R755	5135-103522	RES, CBN 1/2P 10K
901	R756	5135-331522	RES, CBN 1/2P 330
902	R757	5135-332522	RES, CBN 1/2P 3.3K
898	R758	5135-104522	RES, CBN 1/2P 100K
903	R759	5135-471522	RES, CBN 1/2P 470
871	⚠R801	5102-1004715	RES, FUSE 10
872	R804	5135-103522	RES, CBN 1/2P 10K
873	R806	5135-5R6522	RES, CBN 1/2P 5.6
873	R807	5135-5R6522	RES, CBN 1/2P 5.6
873	R808	5135-5R6522	RES, CBN 1/2P 5.6
873	R809	5135-5R6522	RES, CBN 1/2P 5.6
872	R811	5135-103522	RES, CBN 1/2P 10K
872	R813	5135-103522	RES, CBN 1/2P 10K
877	R814	5135-473522	RES, CBN 1/2P 47K
877	R815	5135-473522	RES, CBN 1/2P 47K
872	R816	5135-103522	RES, CBN 1/2P 10K
874	R817	5135-471522	RES, CBN 1/2P 470
875	R818	5135-102522	RES, CBN 1/2P 1K
878	R819	5135-222522	RES, CBN 1/2P 2.2K
876	R820	5135-223522	RES, CBN 1/2P 22K
878	R821	5135-222522	RES, CBN 1/2P 2.2K
876	R822	5135-223522	RES, CBN 1/2P 22K
877	R823	5135-473522	RES, CBN 1/2P 47K
877	R824	5135-473522	RES, CBN 1/2P 47K
880	R827	5135-472522	RES, CBN 1/2P 4.7K
879	R829	5135-561522	RES, CBN 1/2P 560
875	R831	5135-102522	RES, CBN 1/2P 1K
875	R832	5135-102522	RES, CBN 1/2P 1K

INTEGRATED CIRCUITS

521	IC301	5653-U1297CA	IC, LINEAR
702	IC401	5653-BA6138	IC, LINEAR
671	IC701	5654-TC4011BP	IC, DIGITAL
881	IC751	5652-NJM4558D	IC, MONO
851	IC801	5653-BA6229	IC, LINEAR

TRANSISTORS

581	⚠Q1	5612-1375	XISTOR, PNP A
586	Q2	5613-2320(F)	XISTOR, NPN R
586	Q3	5613-2320(F)	XISTOR, NPN R
581	Q4	5612-1375	XISTOR, PNP A
586	Q5	5613-2320(F)	XISTOR, NPN R
586	Q6	5613-2320(F)	XISTOR, NPN R
584	Q7	5611-966(Y)	XISTOR, PNP R
586	Q8	5613-2320(F)	XISTOR, NPN R
582	⚠Q10	5613-2236(Y)	XISTOR, NPN R
583	Q11	5611-999(F)	XISTOR, PNP R
583	Q12	5611-999(F)	XISTOR, PNP R
678	Q51	5611-999(F)	XISTOR, PNP R
401	Q101	5613-1775(F)	XISTOR, NPN R
401	Q102	5613-1775(F)	XISTOR, NPN R
401	Q103	5613-1775(F)	XISTOR, NPN R

Ser. No.	Ref. No.	Part No.	Description
401	Q104	5613-1775(F)	XISTOR, NPN R
402	Q105	5613-2320L(F)	XISTOR, NPN R
402	Q106	5613-2320L(F)	XISTOR, NPN R
404	Q107	5613-UN4214	XISTOR, NPN R
404	Q108	5613-UN4214	XISTOR, NPN R
403	Q109	5613-2320(F)	XISTOR, NPN R
755	Q151	5613-2320L(F)	XISTOR, NPN R
755	Q152	5613-2320L(F)	XISTOR, NPN R
463	Q201	5613-UN4214	XISTOR, NPN R
463	Q202	5613-UN4214	XISTOR, NPN R
463	Q203	5613-UN4214	XISTOR, NPN R
463	Q204	5613-UN4214	XISTOR, NPN R
463	Q205	5613-UN4214	XISTOR, NPN R
463	Q206	5613-UN4214	XISTOR, NPN R
464	Q207	5614-1450(T)	XISTOR, NPN A
464	Q208	5614-1450(T)	XISTOR, NPN A
461	Q209	5613-2320L(F)	XISTOR, NPN R
461	Q210	5613-2320L(F)	XISTOR, NPN R
462	Q211	5611-999L(F)	XISTOR, PNP R
462	Q212	5611-999L(F)	XISTOR, PNP R
461	Q213	5613-2320L(F)	XISTOR, NPN R
461	Q214	5613-2320L(F)	XISTOR, NPN R
465	Q215	5611-UN4114	XISTOR, PNP R
462	Q217	5611-999L(F)	XISTOR, PNP R
462	Q218	5611-999L(F)	XISTOR, PNP R
461	Q219	5613-2320L(F)	XISTOR, NPN R
461	Q220	5613-2320L(F)	XISTOR, NPN R
523	Q301	5613-2120(Y)	XISTOR, NPN R
523	Q302	5613-2120(Y)	XISTOR, NPN R
526	Q303	5611-950(Y)	XISTOR, PNP R
524	Q304	5613-UN4214	XISTOR, NPN R
524	Q305	5613-UN4214	XISTOR, NPN R
524	Q306	5613-UN4214	XISTOR, NPN R
524	Q307	5613-UN4214	XISTOR, NPN R
524	Q308	5613-UN4214	XISTOR, NPN R
525	Q309	5613-3311A(R)	XISTOR, NPN R
527	Q310	5611-UN4114	XISTOR, PNP R
524	Q311	5613-UN4214	XISTOR, NPN R
715	Q401	5613-UN4214	XISTOR, NPN R
716	Q402	5613-3311A(R)	XISTOR, NPN R
642	Q505	5613-UN4214	XISTOR, NPN R
644	Q506	5613-3311A(R)	XISTOR, NPN R
673	Q701	5613-2878(B)	XISTOR, NPN R
673	Q702	5613-2878(B)	XISTOR, NPN R
672	Q703	5613-2240(BL)	XISTOR, NPN R
672	Q704	5613-2240(BL)	XISTOR, NPN R
672	Q705	5613-2240(BL)	XISTOR, NPN R
672	Q706	5613-2240(BL)	XISTOR, NPN R
677	Q707	5614-1450(T)	XISTOR, NPN A
677	Q708	5614-1450(T)	XISTOR, NPN A
677	Q709	5614-1450(T)	XISTOR, NPN A
677	Q710	5614-1450(T)	XISTOR, NPN A
675	Q711	5611-970(BL)	XISTOR, PNP R
676	Q712	5611-UN4114	XISTOR, PNP R
674	Q713	5613-UN4214	XISTOR, NPN R
676	Q714	5611-UN4114	XISTOR, PNP R
676	Q715	5611-UN4114	XISTOR, PNP R
676	Q716	5611-UN4114	XISTOR, PNP R
676	Q717	5611-UN4114	XISTOR, PNP R
856	Q801	5613-UN4214	XISTOR, NPN R
855	Q802	5613-2925(T)	XISTOR, NPN R
855	Q803	5613-2925(T)	XISTOR, NPN R
855	Q804	5613-2925(T)	XISTOR, NPN R
854	Q805	5613-3311A(R)	XISTOR, NPN R
854	Q806	5613-3311A(R)	XISTOR, NPN R
854	Q807	5613-3311A(R)	XISTOR, NPN R
853	Q808	5611-UN4114	XISTOR, PNP R
853	Q809	5611-UN4114	XISTOR, PNP R
853	Q810	5611-UN4114	XISTOR, PNP R
		DIODES	
589	⚠D1	5632-S5566B	DIODE, RECT
589	⚠D2	5632-S5566B	DIODE, RECT
589	⚠D3	5632-S5566B	DIODE, RECT
589	⚠D4	5632-S5566B	DIODE, RECT
589	⚠D5	5632-S5566B	DIODE, RECT
589	⚠D6	5632-S5566B	DIODE, RECT
589	D7	5632-S5566B	DIODE, RECT
589	D8	5632-S5566B	DIODE, RECT
591	D9	5635-HZ12B2L	DIODE, ZENER
591	D10	5635-HZ12B2L	DIODE, ZENER
593	D11	5635-HZ6B2L	DIODE, ZENER
592	D12	5635-HZ6A1L	DIODE, ZENER
594	D13	5635-HZ18-2L	DIODE, ZENER
590	D14	5635-HZ12C2L	DIODE, ZENER
680	⚠D51	5631-1S2473	DIODE, DET
680	⚠D52	5631-1S2473	DIODE, DET
680	D53	5631-1S2473	DIODE, DET
681	D54	5635-HZ11C1L	DIODE, ZENER
682	D55	5635-RD5R1EB2	DIODE, ZENER
680	D56	5631-1S2473	DIODE, DET
680	D57	5631-1S2473	DIODE, DET
595	D58	5635-HZ16-2L	DIODE, ZENER
406	D101	5635-HZ11B2L	DIODE, ZENER
528	D301	5631-1S2473	DIODE, DET
528	D302	5631-1S2473	DIODE, DET
528	D303	5631-1S2473	DIODE, DET
679	D701	5631-1S2473	DIODE, DET
679	D702	5631-1S2473	DIODE, DET
679	D703	5631-1S2473	DIODE, DET
883	D751	5631-1S2473	DIODE, DET
883	D752	5631-1S2473	DIODE, DET
859	D801	5635-HZ7C3	DIODE, ZENER
858	D802	5635-HZ5C2	DIODE, ZENER
860	D803	5635-HZ3B2	DIODE, ZENER
861	D804	5632-S5566B	DIODE, RECT
862	D805	5631-1S2473	DIODE, DET
		COILS	
409	L101	5995-S200J273	COIL W/CORE
409	L102	5995-S200J273	COIL W/CORE
469	L201	5932-11504	COIL CASE, 7
469	L202	5932-11504	COIL CASE, 7
532	L301	5932-11401	COIL CASE, 7
532	L302	5932-11401	COIL CASE, 7
		CONTROLS	
411	VR101	5101-20301934	RES, SEMI FIX 20K
411	VR102	5101-20301934	RES, SEMI FIX 20K
738	VR153/154	5113-S0604503	RES, V CBN 16 50K
473	VR201	5101-20201934	RES, SEMI FIX 2K
473	VR202	5101-20201934	RES, SEMI FIX 2K
535	VR301	5101-20301934	RES, SEMI FIX 20K
535	VR302	5101-20301934	RES, SEMI FIX 20K
535	VR303	5101-20301934	RES, SEMI FIX 20K
535	VR304	5101-20301934	RES, SEMI FIX 20K
537	VR305	5101-50201934	RES, SEMI FIX 5K
537	VR306	5101-50201934	RES, SEMI FIX 5K
709	VR401	5101-20201934	RES, SEMI FIX 2K
709	VR402	5101-20201934	RES, SEMI FIX 2K
885	VR751	5101-10401934	RES, SEMI FIX 100K
		MISCELLANEOUS	
782	⚠J1	4484-46	PIN JACK, 4P
781	J2	4451-00184	JACK, 1P
781	J3	4451-00184	JACK, 1P
792	JL101	4242-R0506121	JUMPER LEAD
470	LC201	5214-13802	LC COMPOSITE
470	LC202	5214-13802	LC COMPOSITE
471	LC203	5214-13901	LC COMPOSITE
471	LC204	5214-13901	LC COMPOSITE
798	LCN801	4163-S0205161	CONNECTOR W/W
799	LCN802	4163-S0205151	CONNECTOR W/W
800	LCN803	4163-S0204141	CONNECTOR W/W
533	T301	5923-10302	OSC COIL, 10
857	PH801	5624-ON3161	PHOTO COUPLR
776	TP101	4214-132	TERMINAL
776	TP102	4214-132	TERMINAL
776	TP201	4214-132	TERMINAL
776	TP202	4214-132	TERMINAL
776	TP203	4214-132	TERMINAL
776	TP501	4214-132	TERMINAL
776	TP502	4214-132	TERMINAL
776	TP701	4214-132	TERMINAL
807	CN101	4443-0601102	CONNECTOR
814	CN102	4443-00501007	CONNECTOR
814	CN103	4443-00501007	CONNECTOR
786	CN201	4443-04501004	CONNECTOR
787	CN202	4443-04501006	CONNECTOR
788	CN203	4443-04501005	CONNECTOR
808	CN301	4443-0201102	CONNECTOR
810	CN801	4443-05501026	CONNECTOR

PCB-2 FRONT P. C. BOARD

		CAPACITORS	
833	C901	5345-106D041	CAP, MINI ELE 10μ/25V
834	C902	5359-S010J103	CAP, PPP .01μ
835	C904	5361-223ZF	CAP, CER .022μ
832	C905	5345-106D041	CAP, MINI ELE 10μ/25V

Ser. No.	Ref. No.	Part No.	Description
832	C906	5345-106D041	CAP, MINI ELE 10μ/25V
		RESISTORS	
841	R901	5135-104522	RES, CBN 1/2P 100K
837	R902	5135-102522	RES, CBN 1/2P 1K
838	R903	5135-183522	RES, CBN 1/2P 18K
839	R904	5135-273522	RES, CBN 1/2P 27K
839	R905	5135-273522	RES, CBN 1/2P 27K
839	R906	5135-273522	RES, CBN 1/2P 27K
839	R907	5135-273522	RES, CBN 1/2P 27K
839	R908	5135-273522	RES, CBN 1/2P 27K
839	R909	5135-273522	RES, CBN 1/2P 27K
836	R910	5135-473522	RES, CBN 1/2P 47K
838	R911	5135-183522	RES, CBN 1/2P 18K
841	R912	5135-104522	RES, CBN 1/2P 100K
841	R913	5135-104522	RES, CBN 1/2P 100K
836	R914	5135-473522	RES, CBN 1/2P 47K
836	R915	5135-473522	RES, CBN 1/2P 47K
840	R916	5135-182522	RES, CBN 1/2P 1.8K
839	R917	5135-273522	RES, CBN 1/2P 27K
838	R918	5135-183522	RES, CBN 1/2P 18K
841	R919	5135-104522	RES, CBN 1/2P 100K
841	R920	5135-104522	RES, CBN 1/2P 100K
837	R921	5135-102522	RES, CBN 1/2P 1K
837	R922	5135-102522	RES, CBN 1/2P 1K
837	R923	5135-102522	RES, CBN 1/2P 1K
837	R924	5135-102522	RES, CBN 1/2P 1K
		INTEGRATED CIRCUIT	
821	IC901	5654-MN18767J	IC, DIGITAL
		TRANSISTORS	
823	Q901	5611-UN4114	XISTOR, PNP R
823	Q902	5611-UN4114	XISTOR, PNP R
823	Q903	5611-UN4114	XISTOR, PNP R
823	Q904	5611-UN4114	XISTOR, PNP R
823	Q905	5611-UN4114	XISTOR, PNP R
824	Q906	5613-3311A(R)	XISTOR, NPN R
		DIODES	
829	D901	5631-1S2473	DIODE, DET
829	D902	5631-1S2473	DIODE, DET
829	D903	5631-1S2473	DIODE, DET
		CONTROLS	
742	VR901/902	5109-S0304104	RES, V CBN 100K
746	VR903	5109-S0402502	RES, V CBN 5K
		MISCELLANEOUS	
812	CN901	4443-00401007	CONNECTOR
812	CN902	4443-00401007	CONNECTOR
809	CN903	4443-05401026	CONNECTOR
827	X901	5693-FC4004A4	OSC, CER
758	FL901	5722-050	TUBE DISPLAY
735	SW901	4437-00604	PUSH SWITCH
735	SW902	4437-00604	PUSH SWITCH
735	SW903	4437-00604	PUSH SWITCH
735	SW904	4437-00604	PUSH SWITCH
735	SW905	4437-00604	PUSH SWITCH
735	SW906	4437-00604	PUSH SWITCH
736	SW907	4437-00603	PUSH SWITCH
733	SW908	4431-S0112306	PUSH SWITCH
733	SW909	4431-S0112306	PUSH SWITCH
733	SW910	4431-S0112306	PUSH SWITCH
735	SW911	4437-00604	PUSH SWITCH
735	SW912	4437-00604	PUSH SWITCH
735	SW913	4437-00604	PUSH SWITCH

PCB-3 DOLBY NR P.C. BOARD

Ser. No.	Ref. No.	Part No.	Description
		CAPACITORS	
647	C501	5345-105F0951	CAP, MINI ELE 1μ/50V
647	C502	5345-105F0951	CAP, MINI ELE 1μ/50V
647	C503	5345-105F0951	CAP, MINI ELE 1μ/50V
647	C504	5345-105F0951	CAP, MINI ELE 1μ/50V
654	C507	5359-S010J222	CAP, PPP 2200p
654	C508	5359-S010J222	CAP, PPP 2200p
654	C509	5359-S010J222	CAP, PPP 2200p
654	C510	5359-S010J222	CAP, PPP 2200p
651	C511	5354-564593	CAP, MYL .56μ
651	C512	5354-564593	CAP, MYL .56μ
652	C513	5354-334593	CAP, MYL .33μ
652	C514	5354-334593	CAP, MYL .33μ
648	C515	5345-106C0951	CAP, MINI ELE 10μ/16V
648	C516	5345-106C0951	CAP, MINI ELE 10μ/16V
649	C517	5345-227C041	CAP, MINI ELE 220μ/16V
649	C518	5345-227C041	CAP, MINI ELE 220μ/16V
656	C519	5359-S010J182	CAP, PPP 1800p
656	C520	5359-S010J182	CAP, PPP 1800p
655	C521	5359-S010J222	CAP, PPP 2200p
655	C522	5359-S010J222	CAP, PPP 2200p
648	C525	5345-106C0951	CAP, MINI ELE 10μ/16V
648	C526	5345-106C0951	CAP, MINI ELE 10μ/16V
648	C527	5345-106C0951	CAP, MINI ELE 10μ/16V
648	C528	5345-106C0951	CAP, MINI ELE 10μ/16V
		RESISTORS	
664	R503	5135-332522	RES, CBN 1/2P 3.3K
664	R504	5135-332522	RES, CBN 1/2P 3.3K
665	R505	5135-682522	RES, CBN 1/2P 6.8K
665	R506	5135-682522	RES, CBN 1/2P 6.8K
659	R507	5174-S010F243	RES, MTL 1/4 24K
659	R508	5174-S010F243	RES, MTL 1/4 24K
660	R509	5174-S010F561	RES, MTL 1/4 560
660	R510	5174-S010F561	RES, MTL 1/4 560
666	R511	5135-102522	RES, CBN 1/2P 1K
661	R512	5174-S010F273	RES, MTL 1/4 27K
668	R513	5135-105522	RES, CBN 1/2P 1M
668	R514	5135-105522	RES, CBN 1/2P 1M
668	R519	5135-105522	RES, CBN 1/2P 1M
668	R520	5135-105522	RES, CBN 1/2P 1M
		INTEGRATED CIRCUIT	
641	IC501	5653-CXA1330S	IC, LINEAR
		TRANSISTORS	
643	Q501	5613-UN4214	XISTOR, NPN R
643	Q502	5613-UN4214	XISTOR, NPN R
643	Q503	5613-UN4214	XISTOR, NPN R
643	Q504	5613-UN4214	XISTOR, NPN R
		MISCELLANEOUS	
645	LC501	5214-13701	LC COMPOSITE
645	LC502	5214-13701	LC COMPOSITE
816	CN501	4443-04401005	CONNECTOR
817	CN502	4443-04401004	CONNECTOR
818	CN503	4443-04401006	CONNECTOR

PCB-4 POWER P.C. BOARD

Ser. No.	Ref. No.	Part No.	Description
		CAPACITOR	
615	⚠C1	5352-S010M103	CAP, MTL .01μ BK
615B	⚠C1	5352-1030961	CAP, MTL .01μ I IB BB
		RESISTOR	
042B	⚠R30	5135-335522	RES, CBN 1/2P 3.3M I IB BB
		TRANSFORMERS	
601	⚠T1	5584-S8201	XFORMER, POWER BK
601B	⚠T1	5584-S8202	XFORMER, POWER I IB BB
		MISCELLANEOUS	
731	⚠SW1	4433-00202	PUSH SWITCH, POWER
041B	⚠SW2	4411-1047111	ROTARY SWITCH I IB BB
806	CN1	4443-060185	CONNECTOR
777	TM1	4214-122	TERMINAL
777	TM2	4214-122	TERMINAL

ABBREVIATIONS IN PARTS LIST

CAPACITORS

CAP, MINI ELE	:Electrolytic
CAP, CER	:Ceramic
CAP, PPP	:Polypropylene
CAP, MYL	:Mylar
CAP, MTL	:Metal
CAP, MCA	:Mica
CAP, MINI BP	:Bipolar
CAP, ELE BP	:Electrolytic Bipolar
CAP, STY	:Polystyrene Film
CAP, SPE	:Special
CAP, TAN	:Tantalum
470μ	:470μF
6800p	:6800pF
.047μ	:0.047μF

RESISTORS

RES, CBN 1/6P	:Carbon 1/6W
RES, FUSE	:Fuse
RES, CEM 5P	:Cement 5W
RES, MTL 1P	:Metal 1W
2.2K	:2.2kΩ
220	:220Ω

TRANSISTORS

XISTOR	:Transistor
FET	:Field Effect Transistor

CONTROLS

RES, V CBN	:Variable-Carbon Resistor
RES, SEMI FIX	:Semi-fixed Resistor

CHASSIS MISCELLANEOUS

Ser. No.	Ref. No.	Part No.	Description
761	⚠P1	4161-71151	CORD W/PLUG BK
761B	⚠P1	4161-7256	CORD W/PLUG I IB
761F	⚠P1	4161-04100	CORD W/PLUG BB

Ser. No.	Ref. No.	Part No.	Description
762		4161-71184	CORD W/PLUG
791	JL801	4242-S0326131	JUMPER LEAD
		PACKAGE PARTS LIST	
021B		1756-06303	LABEL I IB BB
022B		1756-03124	LABEL I IB
022F		1756-03111	LABEL BB
024F		1111-J30319	OWNER GUIDE BB
106		1111-J30323	OWNER GUIDE BK BB
106B		1111-J30324	OWNER GUIDE I IB
107		1113-717004	OWNER CARD BK
111		1119-047	ATTACH SHEET, WARRANTY BK
112		1119-0137	ATTACH SHEET, SERVICE AGENCIES BK
113		1119-01201	ATTACH SHEET, SAFETY BK
115		1221-28007	CARTON BOX I
115A		1221-28002	CARTON BOX BK IB BB
116		1222-7362	CUSHION
117		1222-7365	CUSHION
119		1223-R0220055	SOFT SHEET, SET FRONT
123		1241-R0160600	POLYETHY BAG, SET
124		1241-R0123350	POLYETHY BAG, OWNER GUIDE

NOTE

⚠ SAFETY RELATED COMPONENT. USE ONLY EXACT REPLACEMENT PART AS SPECIFIED.

IC BLOCK DIAGRAM

IC301 : µPC1297CA
Dolby HX Pro

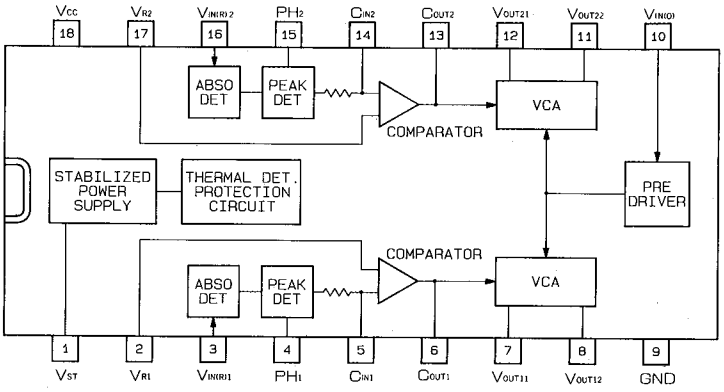

IC501 : CXA1330S
Dolby B/C NR

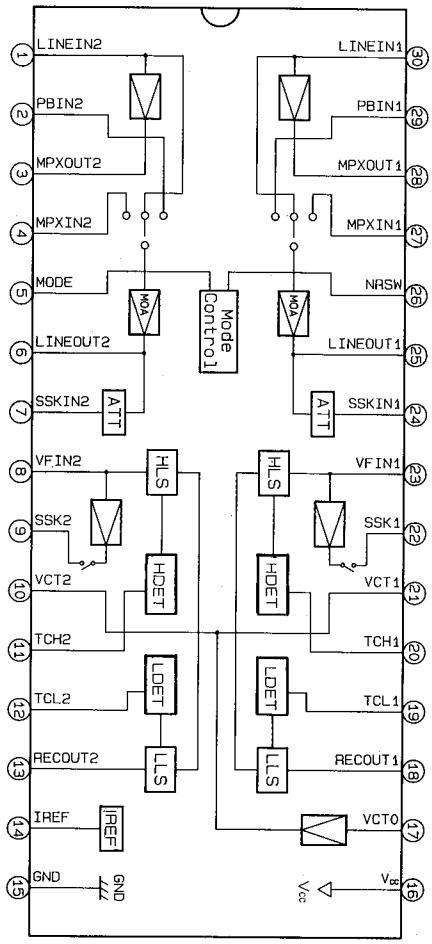

IC401 : BA6138
Signal Level Meter

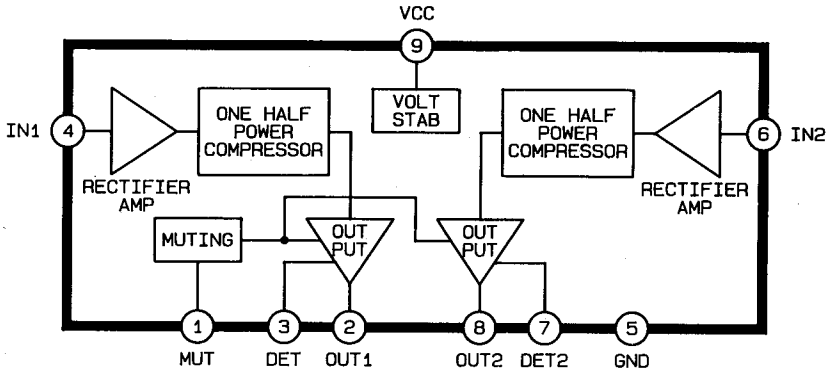

IC801 : BA6229
Motor Driver

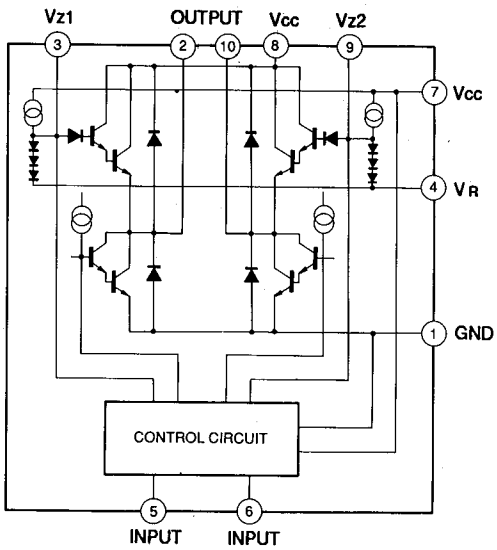

IC751 : NJM4558D
OP-Amp.

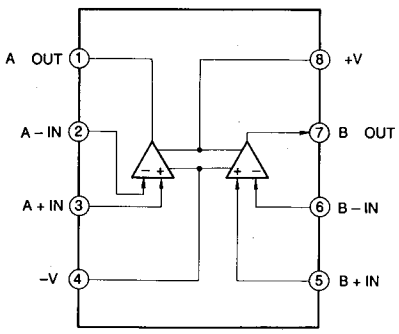

IC701 : TC4011BP
2-Input NAND Gate

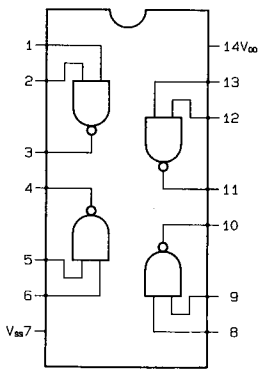

IC901 : MN187167J
Logic Controller

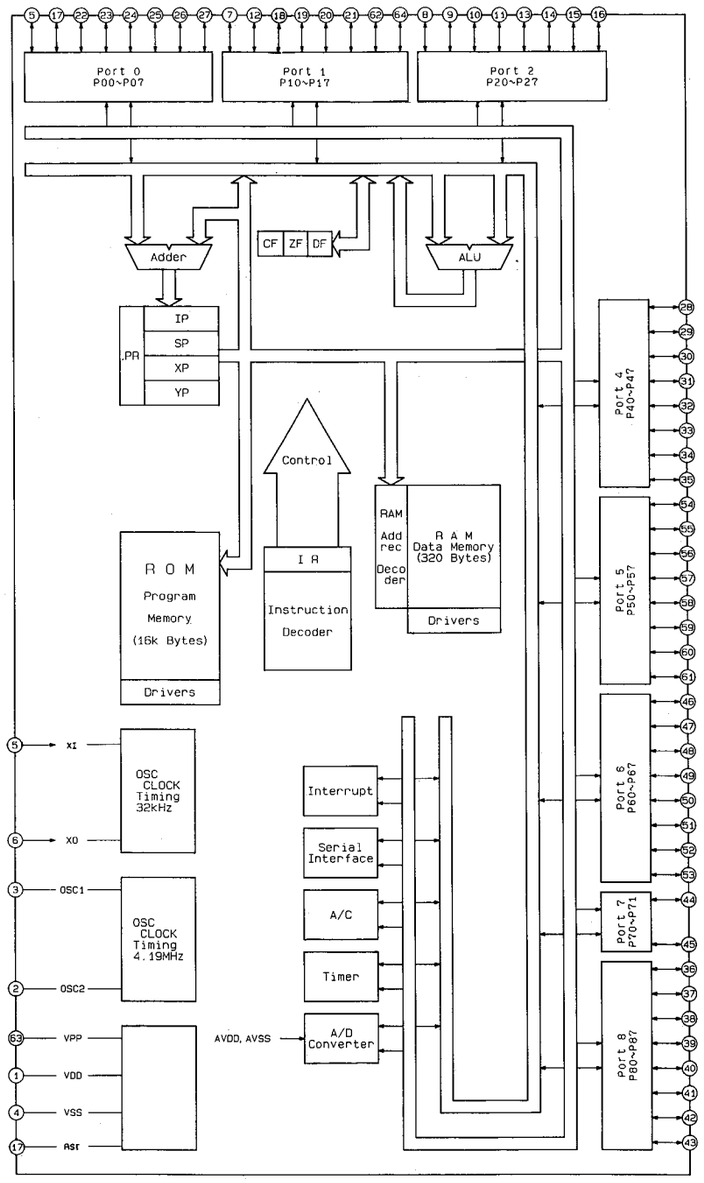

TERMINAL FUNCTIONS

Pin No.	Port name	Function name	I/O	Outline of functions
5	P06	XI	I	Initial setting switch. Hight level=ON
6	XO	XO	O	
7	P17	AVdd	I	D/A converter standard voltage(DC 5V).
8	P27	AD7	I	Key input terminal.
9	P26	AD6	I	Key input terminal.
10	P25	AD5	I	Key input terminal.
11	P24	AD4	I	Key input terminal.
12	P16	AVss		GND terminal.
13	P23	AD3	I	Key input terminal.
14	P22	AD2	I	A/D input port for LEVEL METER indication.
15	P21	AD1	I	A/D input port for LEVEL METER indication.
16	P20	AD0	I	A/D input port for music search.
17	P07	RST	I	Reset input.
18	1RQ1	R-SI	I	Remote control input.
19	1RQϕ	VOLT DN	I	Power on/off detection terminal. Low level=OFF
20	P13	DOLBY-B	I	Input port to switch DOLBY display.
21	P12	DOLBY-C	I	Input port to switch DOLBY display.
22	P05	IND.CONT	O	High level on stand-by or display off and after power off.
23	P04	MONITOR	O	High level on MONITOR mode. Low level on SOURCE mode.
24	P03	REC	O	REC/PLAY switching terminal. High level on REC.
25	P02	BIAS	O	BIAS control terminal. High level=BIAS ON
26	P01	REC MUTE	O	Recording amp. muting terminal. High level=MUTING ON
27	P00	PB MUTE	O	Playback amp. muting terminal. High level=MUTING ON
28	P47	LINE MUTE	O	Line muting terminal. High level=MUTING ON
29	P46	RM1	O	Reel motor control. High level=active
30	P45	RM2	O	Reel motor control. High level=active
31	P44	RPC	O	Reel motor power control. High level=power down
32	P43	CPM	O	Capstan motor control.

NOTE: Low level=0V
High level=5.1V

IC901 : MN187167J
Logic Controller

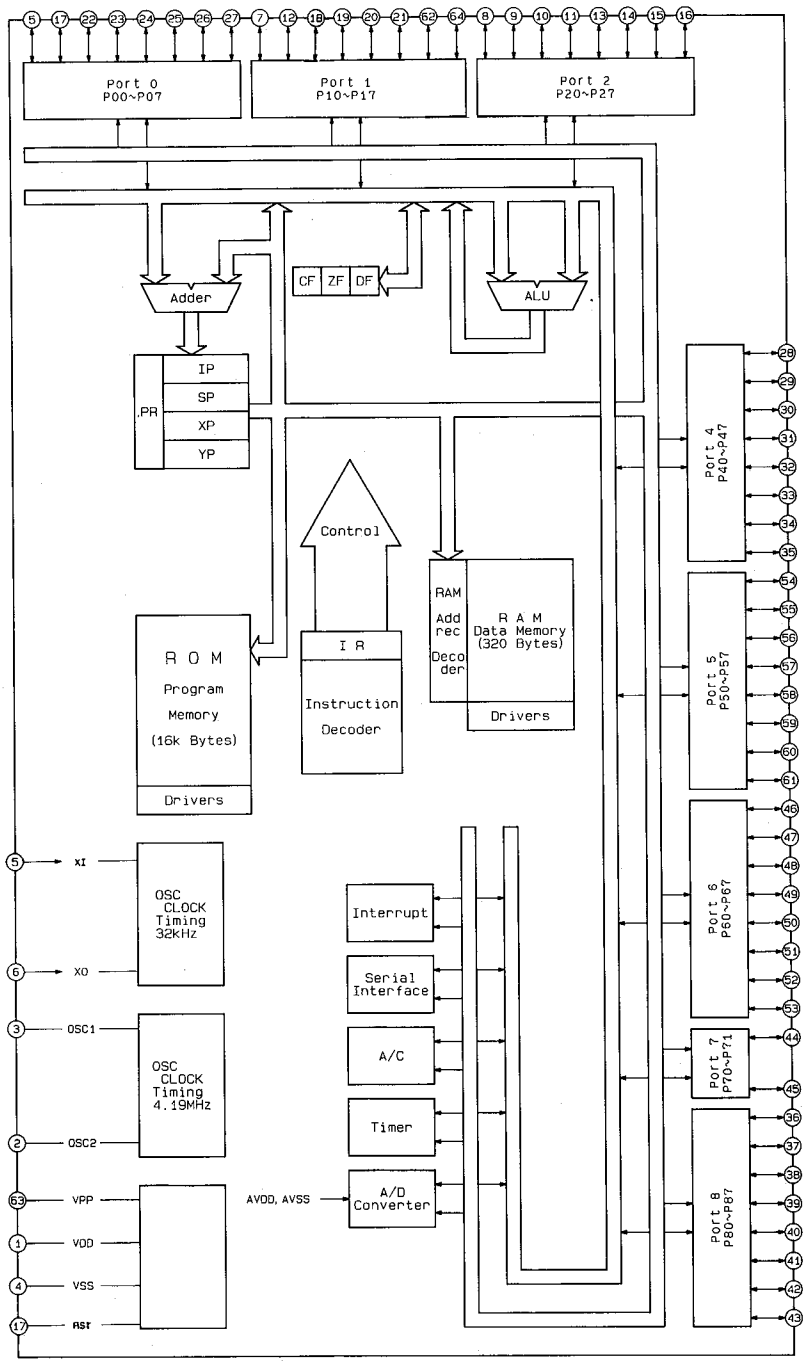

TERMINAL FUNCTIONS

Pin No.	Port name	Function name	I/O	Outline of functions
5	P06	XI	I	Initial setting switch. Hight level=ON
6	XO	XO	O	
7	P17	AVdd	I	D/A converter standard voltage(DC 5V).
8	P27	AD7	I	Key input terminal.
9	P26	AD6	I	Key input terminal.
10	P25	AD5	I	Key input terminal.
11	P24	AD4	I	Key input terminal.
12	P16	AVss		GND terminal.
13	P23	AD3	I	Key input terminal.
14	P22	AD2	I	A/D input port for LEVEL METER indication.
15	P21	AD1	I	A/D input port for LEVEL METER indication.
16	P20	AD0	I	A/D input port for music search.
17	P07	RST	I	Reset input.
18	1RQ1	R-SI	I	Remote control input.
19	1RQϕ	VOLT DN	I	Power on/off detection terminal. Low level=OFF
20	P13	DOLBY-B	I	Input port to switch DOLBY display.
21	P12	DOLBY-C	I	Input port to switch DOLBY display.
22	P05	IND.CONT	O	High level on stand-by or display off and after power off.
23	P04	MONITOR	O	High level on MONITOR mode. Low level on SOURCE mode.
24	P03	REC	O	REC/PLAY switching terminal. High level on REC.
25	P02	BIAS	O	BIAS control terminal. High level=BIAS ON
26	P01	REC MUTE	O	Recording amp. muting terminal. High level=MUTING ON
27	P00	PB MUTE	O	Playback amp. muting terminal. High level=MUTING ON
28	P47	LINE MUTE	O	Line muting terminal. High level=MUTING ON
29	P46	RM1	O	Reel motor control. High level=active
30	P45	RM2	O	Reel motor control. High level=active
31	P44	RPC	O	Reel motor power control. High level=power down
32	P43	CPM	O	Capstan motor control.

NOTE: Low level=0V
High level=5.1V

SCHEMATIC DIAGRAM (1)

PCB-2 Front P. C. Board

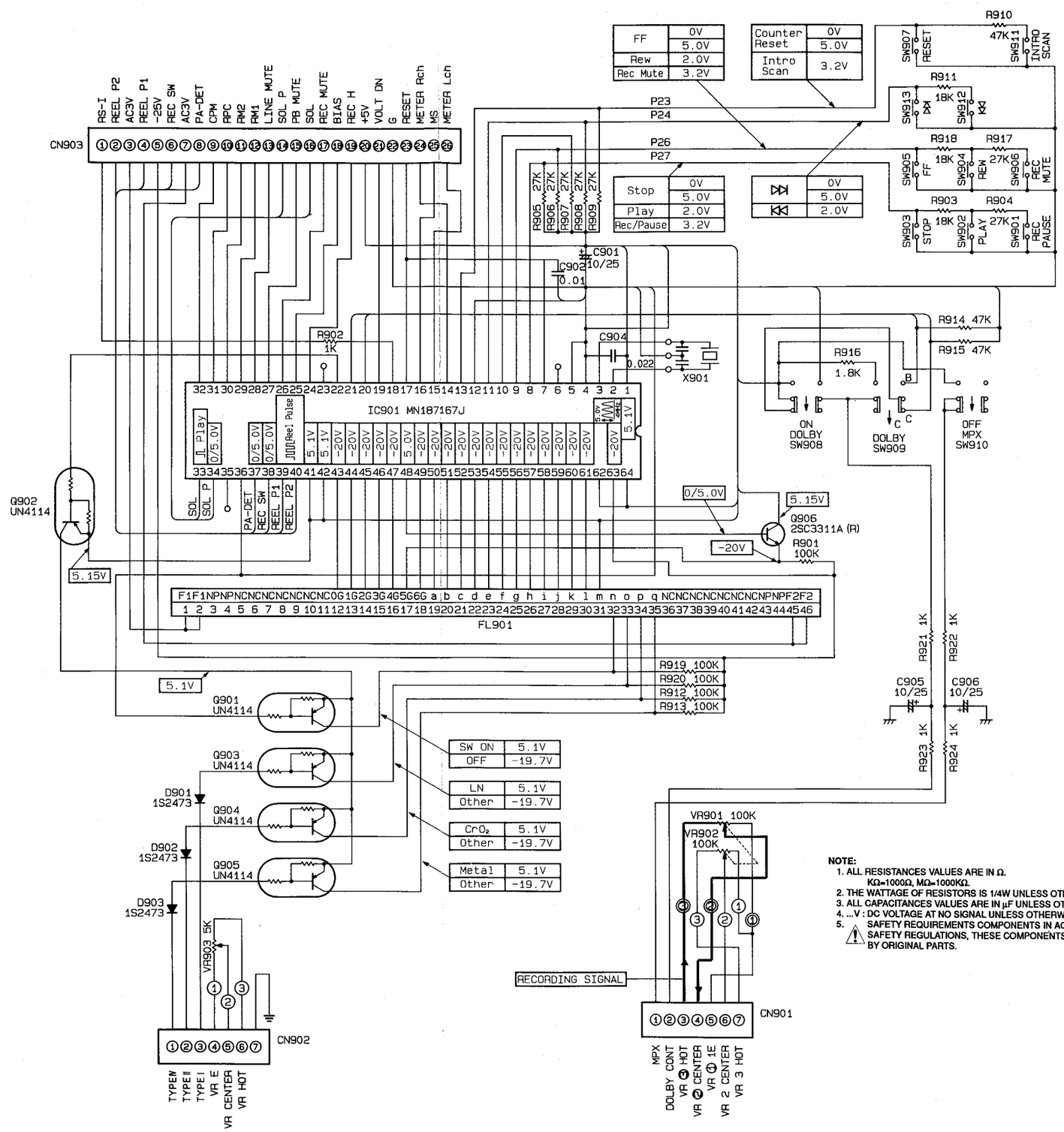

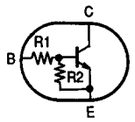

Type	R1(kΩ)	R2(kΩ)
UN4214	10	47

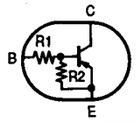

Type	R1(kΩ)	R2(kΩ)
UN4114	10	47

NOTE:
1. ALL RESISTANCES VALUES ARE IN Ω.
   KΩ=1000Ω, MΩ=1000KΩ.
2. THE WATTAGE OF RESISTORS IS 1/4W UNLESS OTHERWISE NOTED.
3. ALL CAPACITANCES VALUES ARE IN μF UNLESS OTHERWISE NOTED. P=μμF.
4. ...V : DC VOLTAGE AT NO SIGNAL UNLESS OTHERWISE NOTED.
5. ⚠ SAFETY REQUIREMENTS COMPONENTS IN ACCORDANCE WITH PRESENT SAFETY REGULATIONS, THESE COMPONENTS MUST ONLY BE REPLACED BY ORIGINAL PARTS.

SCHEMATIC DIAGRAM (1)

PCB-2 Front P. C. Board

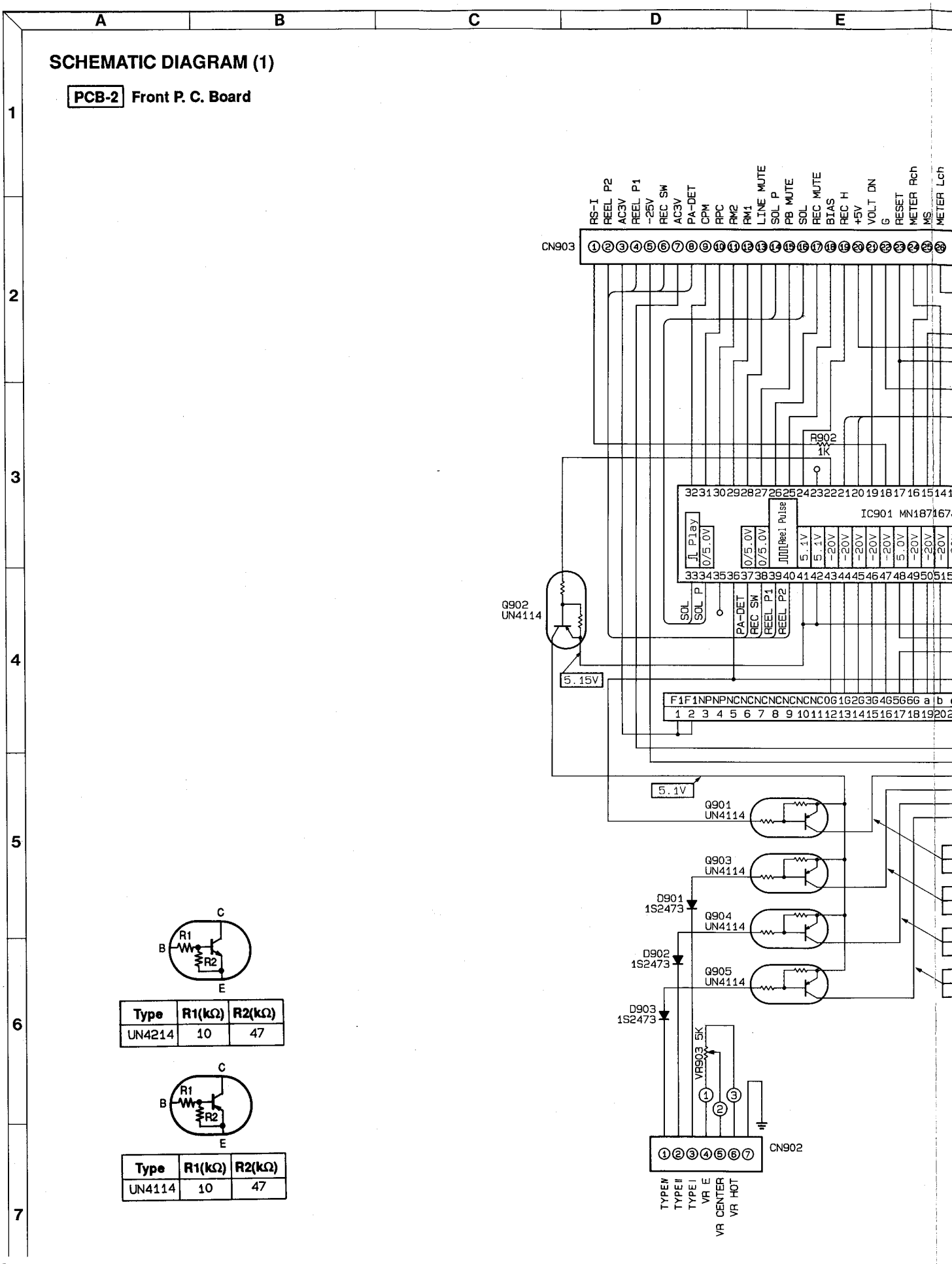

Type	R1(kΩ)	R2(kΩ)
UN4214	10	47

Type	R1(kΩ)	R2(kΩ)
UN4114	10	47

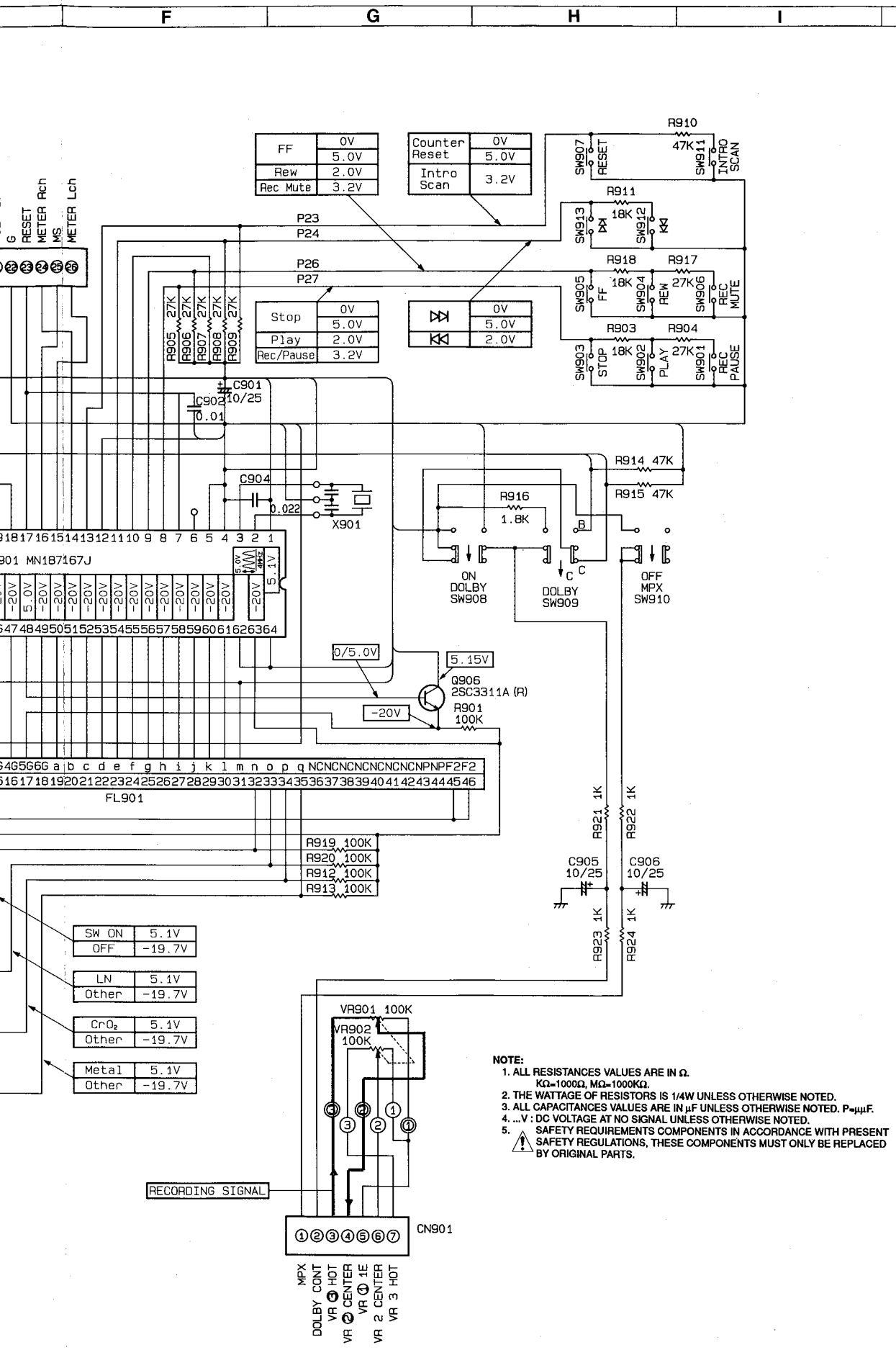

NOTE:

1. ALL RESISTANCES VALUES ARE IN Ω.
   KΩ=1000Ω, MΩ=1000KΩ.
2. THE WATTAGE OF RESISTORS IS 1/4W UNLESS OTHERWISE NOTED.
3. ALL CAPACITANCES VALUES ARE IN μF UNLESS OTHERWISE NOTED. P=μμF.
4. ...V : DC VOLTAGE AT NO SIGNAL UNLESS OTHERWISE NOTED.
5. ⚠ SAFETY REQUIREMENTS COMPONENTS IN ACCORDANCE WITH PRESENT SAFETY REGULATIONS, THESE COMPONENTS MUST ONLY BE REPLACED BY ORIGINAL PARTS.

SCHEMATIC DIAGRAM (2)

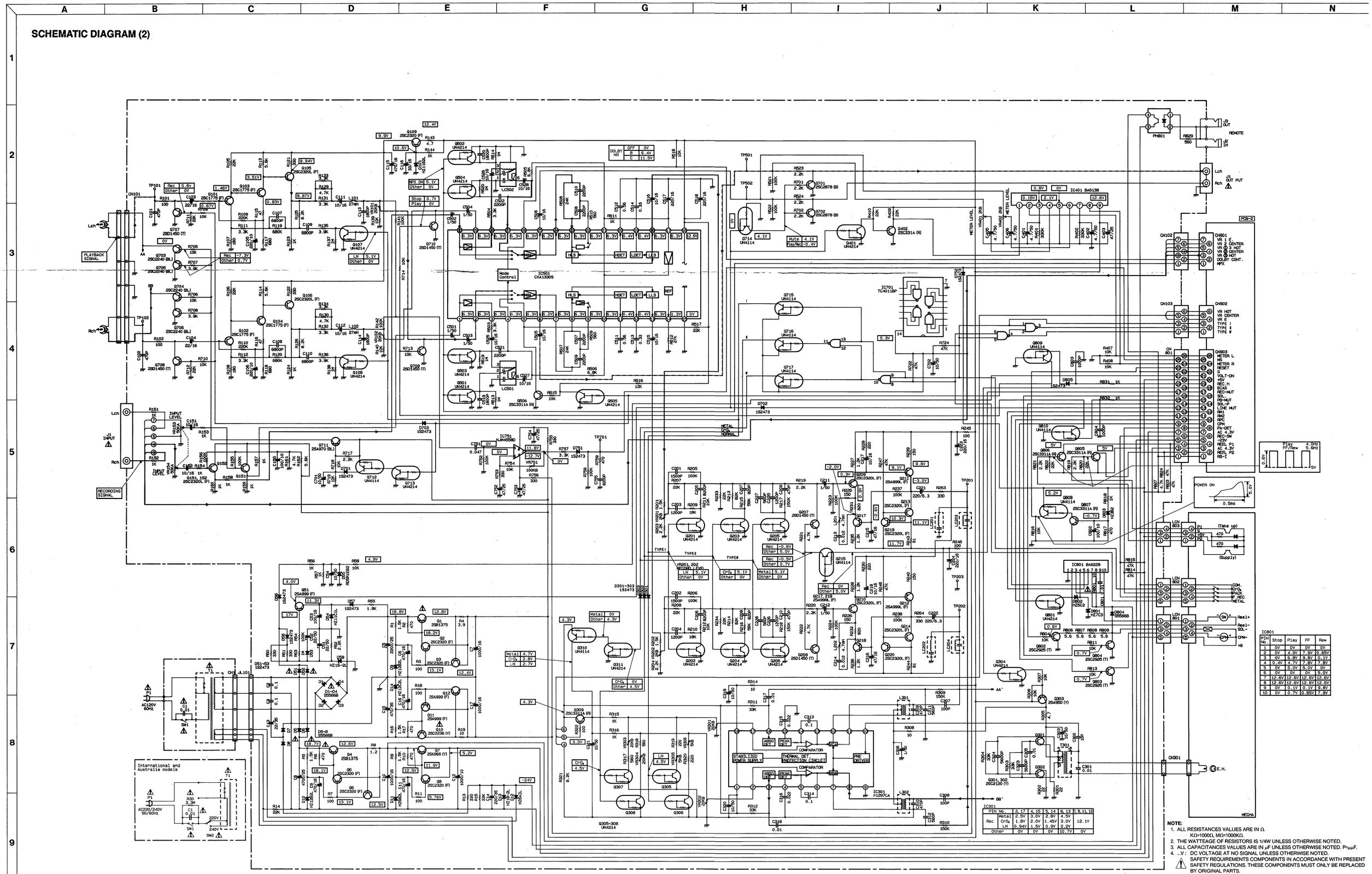

IC301 PIN No.		2, 17	4, 15	5, 14	6, 13	7, 8, 11, 12
Rec	Metal	2.5V	3.0V	2.8V	4.5V	12.1V
	CrO2	1.8V	2.0V	1.45V	3.0V	
	LN	0.94V	1.5V	0.9V	2.2V	
Other		0V	0V	0V	10.7V	0V

IC801 PIN No.	Stop	Play	FF	Rew
1	0V	0V	0V	0V
2	0V	4.9V	7.9V	0.65V
3	0V	6.8V	9.8V	0.1V
4	0.4V	4.7V	7.8V	7.8V
5	0V	5.0V	5.0V	0V
6	0V	0V	0V	5.0V
7	12.6V	12.6V	12.6V	12.6V
8	12.6V	12.6V	12.6V	12.6V
9	0V	0.1V	0.1V	9.8V
10	0V	0.7V	0.65V	7.9V

NOTE:

1. ALL RESISTANCES VALUES ARE IN Ω.
   KΩ=1000Ω, MΩ=1000KΩ.
2. THE WATTEAGE OF RESISTORS IS 1/4W UNLESS OTHERWISE NOTED.
3. ALL CAPACITANCES VALUES ARE IN μF UNLESS OTHERWISE NOTED. P=μμF.
4. ...V : DC VOLTAGE AT NO SIGNAL UNLESS OTHERWISE NOTED.

⚠ SAFETY REQUIREMENTS COMPONENTS IN ACCORDANCE WITH PRESENT SAFETY REGULATIONS. THESE COMPONENTS MUST ONLY BE REPLACED BY ORIGINAL PARTS.

SCHEMATIC DIAGRAM (2)

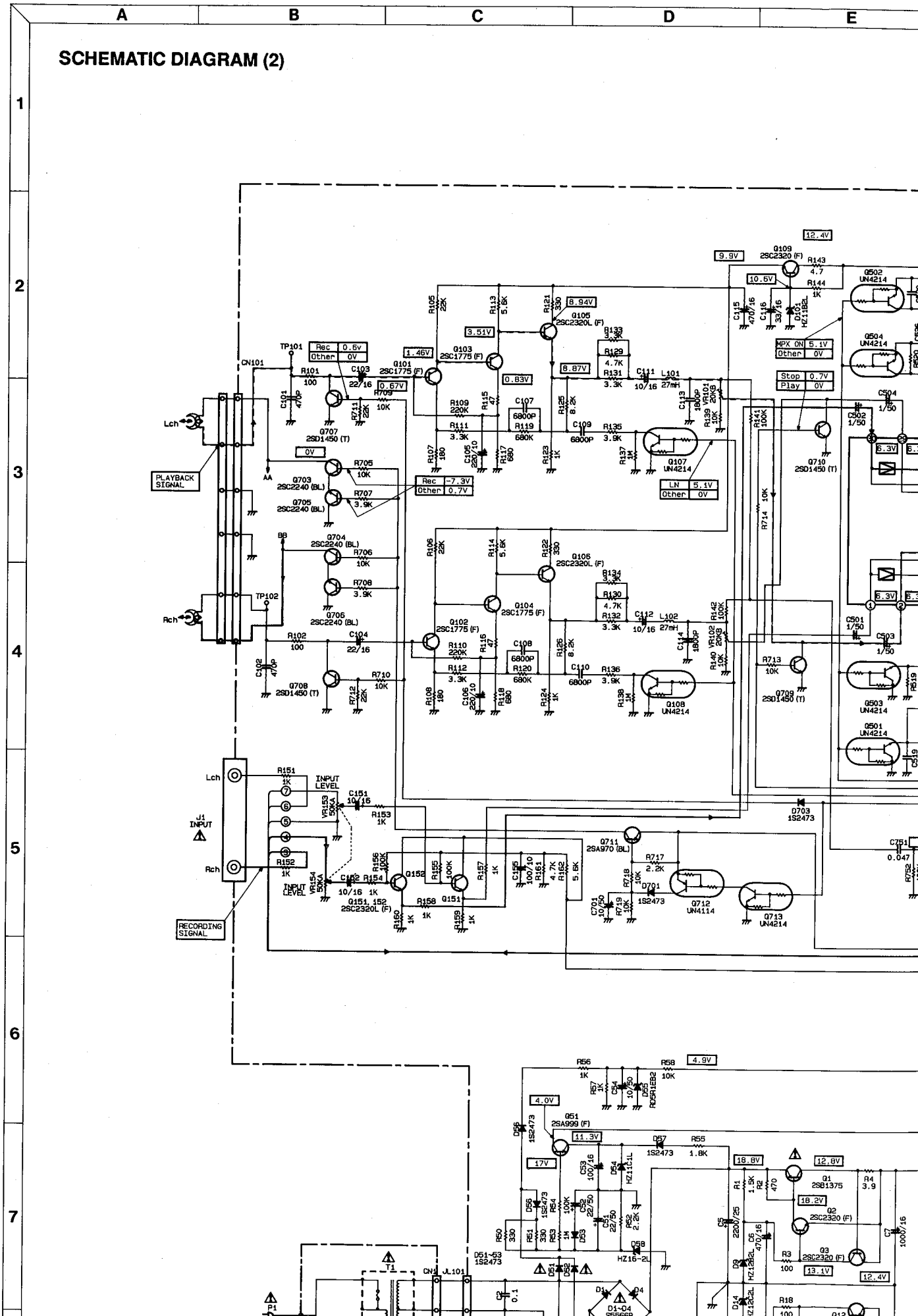

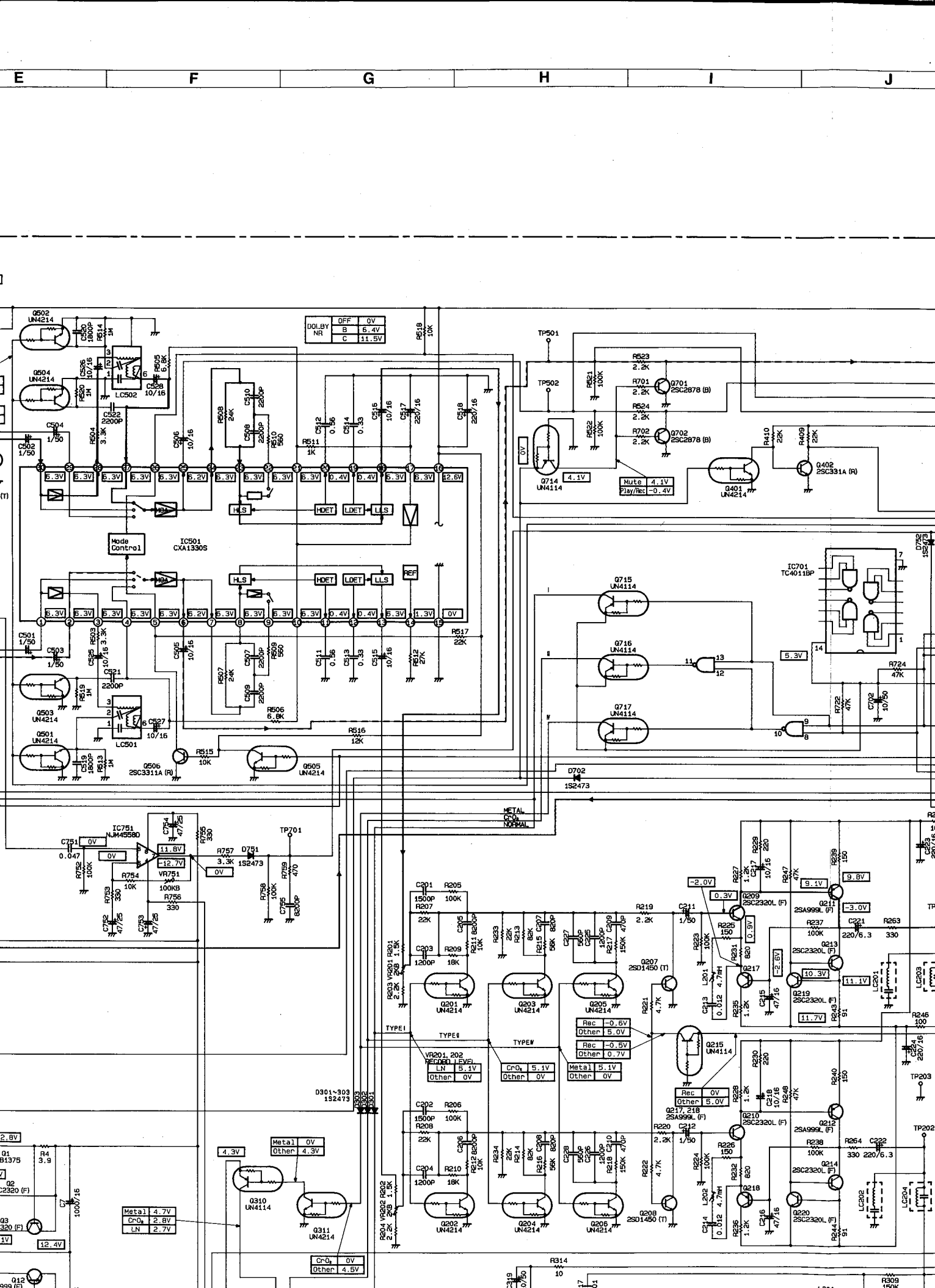
E
F
G
H
I
J
DOLBY NR
OFF 0V
B 6.4V
C 11.5V
IC501
CXA1330S
Mode Control
HLS
HDET
LDET
LLS
REF
LC501
LC502
IC701
TC4011BP
IC751
NJM4558D
VR751
100KB
TP501
TP502
TP701
TP203
TP202
Mute 4.1V
Play/Rec -0.4V
METAL
CrO2
NORMAL
TYPE I
TYPE II
TYPE IV
VR201, 202
RECORD LEVEL
LN 5.1V
Other 0V
CrO2 5.1V
Other 0V
Metal 5.1V
Other 0V
Rec -0.6V
Other 5.0V
Rec -0.5V
Other 0.7V
Rec 0V
Other 5.0V
Metal 0V
Other 4.3V
Metal 4.7V
CrO2 2.8V
LN 2.7V
CrO2 0V
Other 4.5V
D301~303
1S2473
D702
1S2473
D751
1S2473
Q502
UN4214
Q504
UN4214
Q503
UN4214
Q501
UN4214
Q506
2SC3311A (R)
Q505
UN4214
Q701
2SC2878 (B)
Q702
2SC2878 (B)
Q714
UN4114
Q401
UN4214
Q402
2SC3331A (R)
Q715
UN4114
Q716
UN4114
Q717
UN4114
Q310
UN4114
Q311
UN4214
Q201
UN4214
Q203
UN4214
Q205
UN4214
Q202
UN4214
Q204
UN4214
Q206
UN4214
Q207
2SD1450 (T)
Q208
2SD1450 (T)
Q215
UN4114
Q217, 218
2SA999L (F)
Q209
2SC2320L (F)
Q211
2SA999L (F)
Q213
2SC2320L (F)
Q219
2SC2320L (F)
Q210
2SC2320L (F)
Q212
2SA999L (F)
Q214
2SC2320L (F)
Q220
2SC2320L (F)
Q217
Q218

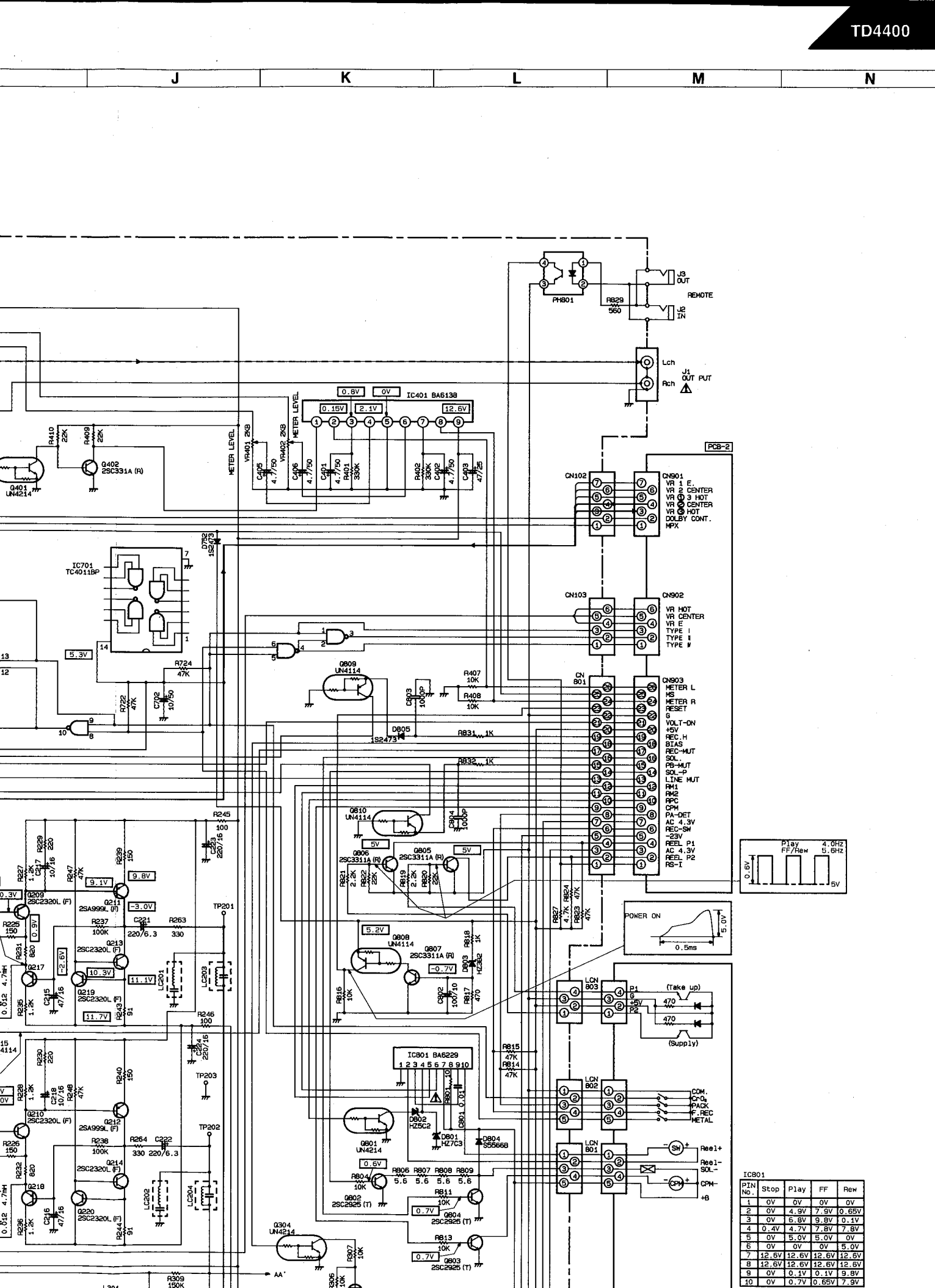

IC801

PIN No.	Stop	Play	FF	Rew
1	0V	0V	0V	0V
2	0V	4.9V	7.9V	0.65V
3	0V	5.8V	9.8V	0.1V
4	0.4V	4.7V	7.8V	7.8V
5	0V	5.0V	5.0V	0V
6	0V	0V	0V	5.0V
7	12.6V	12.6V	12.6V	12.6V
8	12.6V	12.6V	12.6V	12.6V
9	0V	0.1V	0.1V	9.8V
10	0V	0.7V	0.65V	7.9V

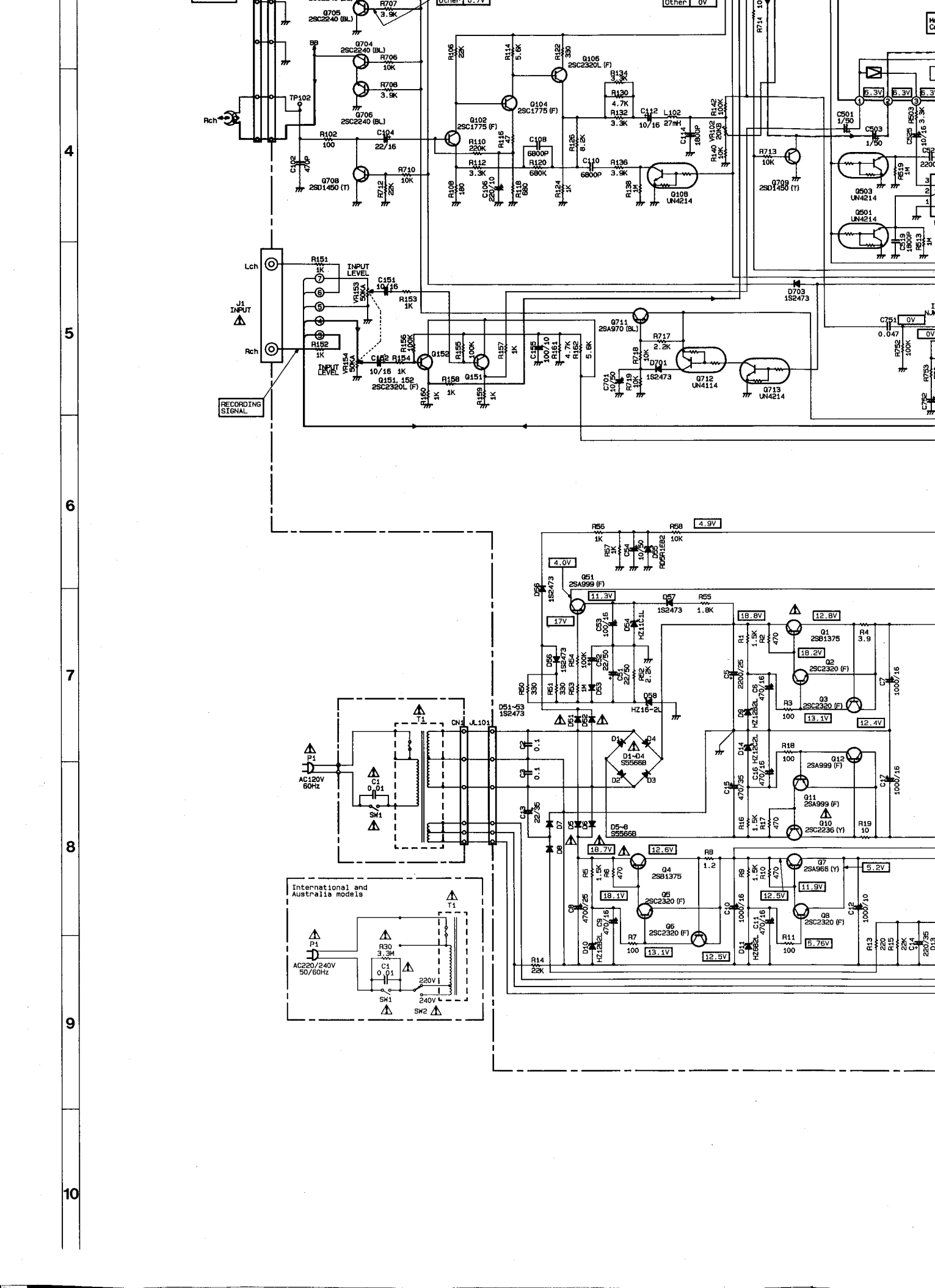
Q705 2SC2240 (BL)
R707 3.9K
Q704 2SC2240 (BL)
R706 10K
R708 3.9K
Q706 2SC2240 (BL)
TP102
Rch
R102 100
C104 22/16
C102 470P
Q708 2SD1450 (T)
R710 10K
R712 22K
R106 22K
R114 5.6K
R122 330
Q106 2SC2320L (F)
R134 3.9K
R130 4.7K
R132 3.3K
C112 10/16
L102 27mH
C114 1800P
R142 100K
R140 10K
VR102 20KB
Q104 2SC1775 (F)
Q102 2SC1775 (F)
R110 220K
R116 47
C108 6800P
R120 680K
R126 8.2K
C110 6800P
R136 3.9K
R112 3.3K
R108 180
C106 220/10
R118 680
R124 1K
R138 1M
Q108 UN4214
R713 10K
Q709 2SD1450 (T)
C501 1/50
C503 1/50
R503
R619 1M
Q503 UN4214
Q501 UN4214
C519 1800P
R513 1M
D703 1S2473
Lch
R151 1K
INPUT LEVEL
C151 10/16
R153 1K
VR153 50KA
J1 INPUT
Rch
R152 1K
VR154 50KA
INPUT LEVEL
C152 10/16
R154 1K
R156 100K
Q152
R155 100K
R157 1K
Q151, 152 2SC2320L (F)
Q151
R158 1K
R159 1K
R160 1K
C155 100/10
R161 4.7K
R162 5.6K
Q711 2SA970 (BL)
R717 2.2K
R718 10K
D701 1S2473
C701 10/50
R719 10K
Q712 UN4114
Q713 UN4214
C751 0.047
R752 100K
R753
RECORDING SIGNAL
R56 1K
R58 10K
4.9V
R57 1K
C54 10/50
D55 RD5R1EB2
4.0V
D56 1S2473
Q51 2SA999 (F)
11.3V
D57 1S2473
R55 1.8K
17V
C53 100/16
D54 HZ11C1L
18.8V
12.8V
R1 1.5K
R2 470
Q1 2SB1375
R4 3.9
18.2V
Q2 2SC2320 (F)
C5 2200/25
C6 470/16
C7 1000/16
R50 330
R51 330
R53 1M
C51 22/50
R52 2.2K
D58 HZ16-2L
R3 100
Q3 2SC2320 (F)
13.1V
12.4V
D51~53 1S2473
T1
CN1
JL101
P1
AC120V 60Hz
C1 0.01
SW1
C2 0.1
C3 0.1
C13 22/35
D1~D4 S5566B
D5~8 S5566B
D9 HZ12C2L
D14 HZ12C2L
R18 100
Q12 2SA999 (F)
Q11 2SA999 (F)
Q10 2SC2236 (Y)
C15 470/35
C16 470/16
C17 1000/16
R16 1.5K
R17 470
R19 10
18.7V
12.6V
R8 1.2
Q4 2SB1375
R5 1.5K
R6 470
18.1V
Q5 2SC2320 (F)
Q6 2SC2320 (F)
C8 4700/25
C9 470/16
D10 HZ12C2L
R7 100
13.1V
12.5V
R14 22K
Q7 2SA966 (Y)
5.2V
11.9V
R9 1.5K
R10 470
12.5V
Q8 2SC2320 (F)
C10 1000/16
C11 470/16
D11 HZ6C2L
R11 100
5.76V
C12 1000/10
R13 220
R15 22K
C14 220/35
International and Australia models
T1
P1
AC220/240V 50/60Hz
R30 3.3M
C1 0.01
SW1
220V
240V
SW2

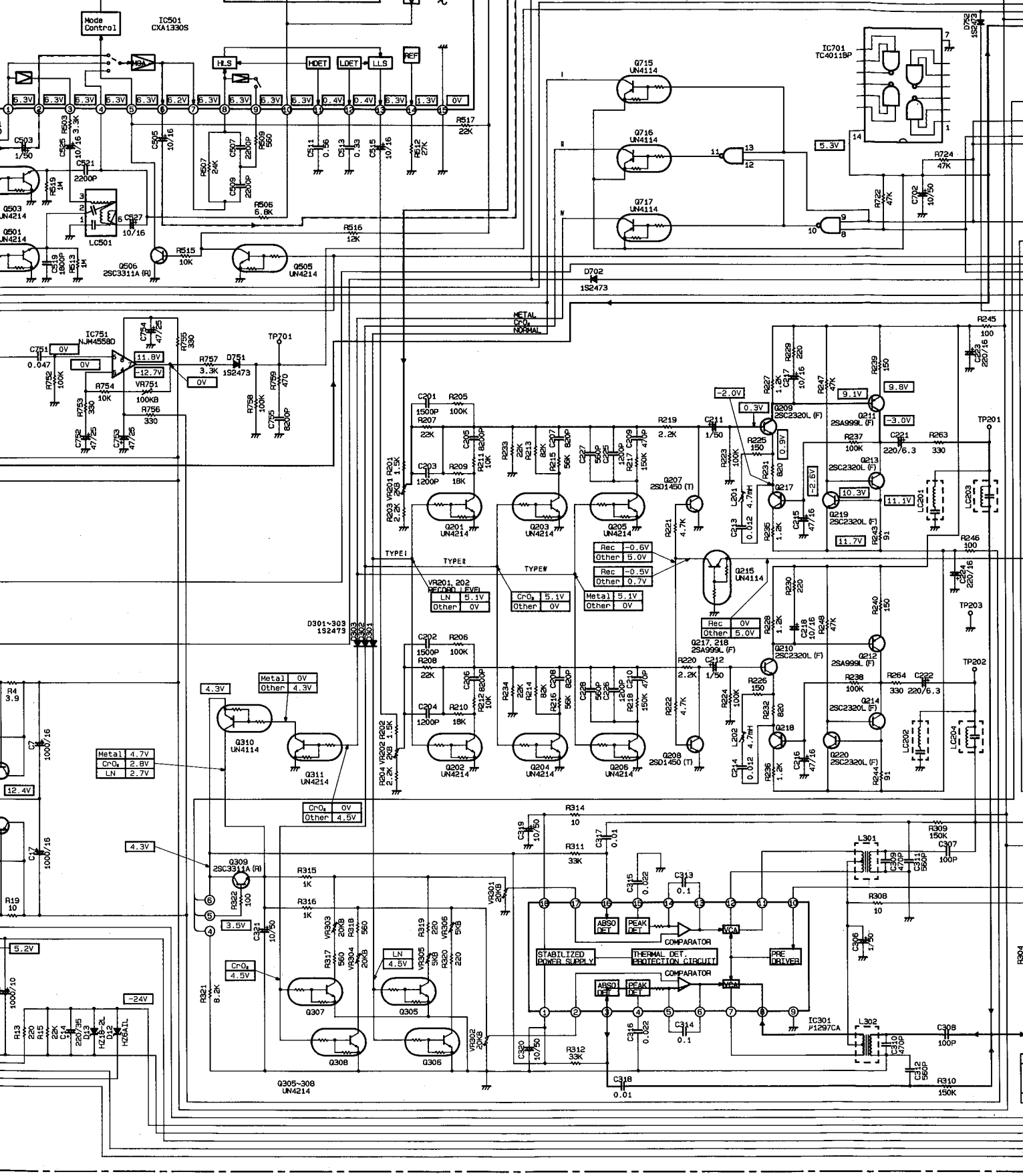
Mode Control
IC501
CXA1330S
HLS
HDET
LDET
LLS
REF
IC701
TC4011BP
Q715
UN4114
Q716
UN4114
Q717
UN4114
Q506
2SC3311A (R)
Q505
UN4214
LC501
D702
1S2473
METAL
CrO2
NORMAL
IC751
NJM4558D
VR751
100KB
TP701
D751
1S2473
TYPE I
TYPE II
TYPE IV
VR201, 202
RECORD LEVEL
D301~303
1S2473
Q310
UN4114
Q311
UN4214
Q309
2SC3311A (R)
Q307
Q308
Q305
Q306
Q305~308
UN4214
IC301
μ1297CA
STABILIZED POWER SUPPLY
THERMAL DET. PROTECTION CIRCUIT
PRE DRIVER
COMPARATOR
ABSO DET
PEAK DET
VCA
Q209
2SC2320L (F)
Q211
2SA999L (F)
Q213
2SC2320L (F)
Q219
2SC2320L (F)
Q217, 218
2SA999L (F)
Q210
2SC2320L (F)
Q212
2SA999L (F)
Q214
2SC2320L (F)
Q220
2SC2320L (F)
Q207
2SD1450 (T)
Q208
2SD1450 (T)
Q215
UN4114
Q201
UN4214
Q202
UN4214
Q203
UN4214
Q204
UN4214
Q205
UN4214
TP201
TP202
TP203
LC201
LC202
LC203
LC204
L301
L302

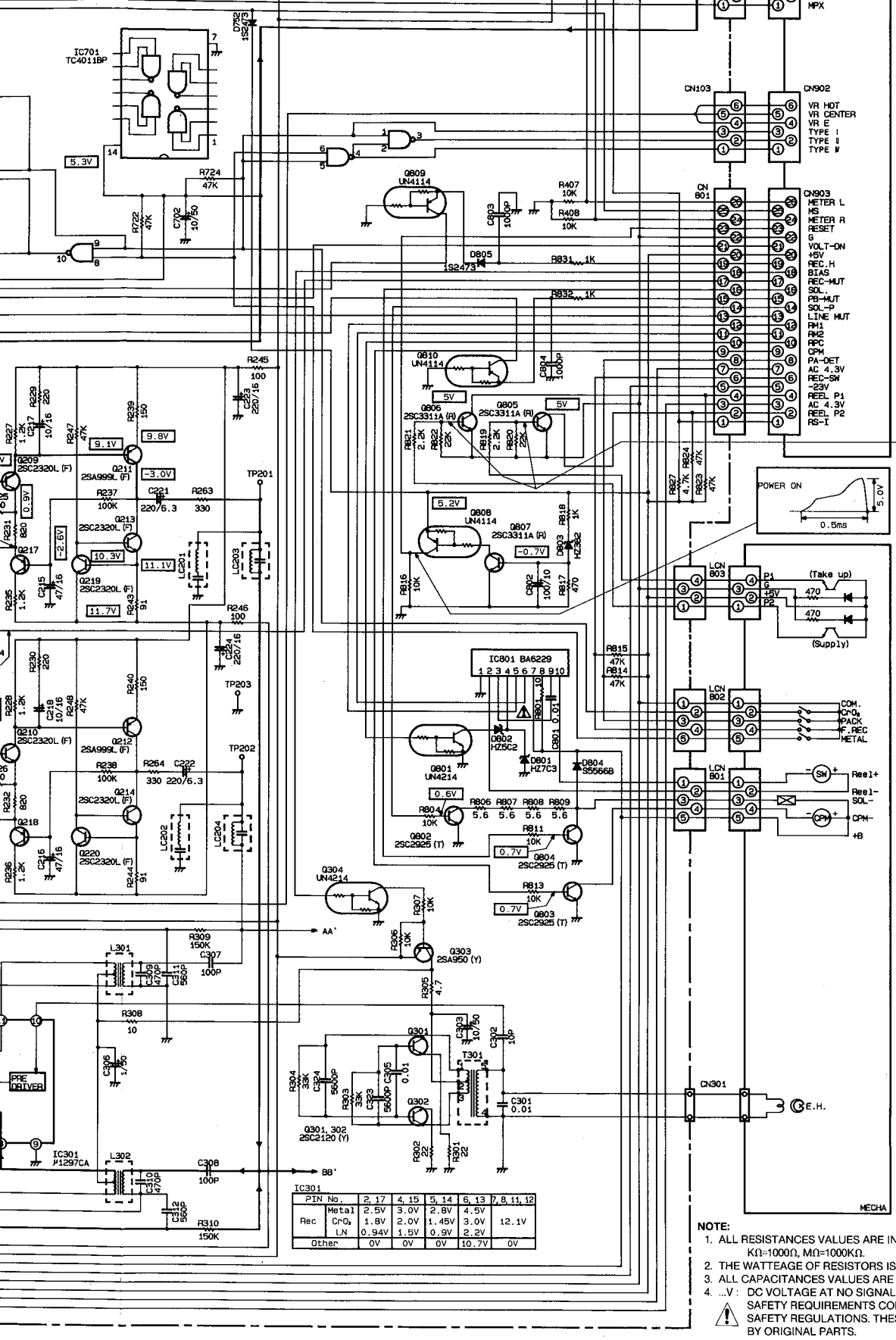

IC801

PIN No.	Stop	Play	FF	Rew
1	0V	0V	0V	0V
2	0V	4.9V	7.9V	0.65V
3	0V	6.8V	9.8V	0.1V
4	0.4V	4.7V	7.8V	7.8V
5	0V	5.0V	5.0V	0V
6	0V	0V	0V	5.0V
7	12.6V	12.6V	12.6V	12.6V
8	12.6V	12.6V	12.6V	12.6V
9	0V	0.1V	0.1V	9.8V
10	0V	0.7V	0.65V	7.9V

IC301

PIN No.		2, 17	4, 15	5, 14	6, 13	7, 8, 11, 12
Rec	Metal	2.5V	3.0V	2.8V	4.5V	12.1V
	CrO_2	1.8V	2.0V	1.45V	3.0V	
	LN	0.94V	2.0V	0.9V	2.2V	
Other		0V	0V	0V	10.7V	0V

NOTE:

1. ALL RESISTANCES VALUES ARE IN Ω.
   KΩ=1000Ω, MΩ=1000KΩ.
2. THE WATTEAGE OF RESISTORS IS 1/4W UNLESS OTHERWISE NOTED.
3. ALL CAPACITANCES VALUES ARE IN μF UNLESS OTHERWISE NOTED. P=μμF.
4. ...V : DC VOLTAGE AT NO SIGNAL UNLESS OTHERWISE NOTED.

⚠ SAFETY REQUIREMENTS COMPONENTS IN ACCORDANCE WITH PRESENT SAFETY REGULATIONS. THESE COMPONENTS MUST ONLY BE REPLACED BY ORIGINAL PARTS.